DESIGN REVIEW BOARD APPLICATION

Administered by:
Design Review Board

Property Address*: 18 S. Main St. Memphis, TN 38103

Applicant Name & Mailing Address: Emily Redding, designshop, pllc. 498 S. Main St. Memphis, TN 38103

Applicant Phone Number: 901.303.8255 Applicant Fax Number:

Property Owner's Name & Mailing Address: 18 S Main Mem, LLC, 3839 Flatlands Ave, Suite 206, Brooklyn, NY 11234

Property Owner's Phone Number: 646.880.9231

The proposed work consists of the following (check all that apply):

Sign ❑	Renovation☒
New Building ❑	Other Exterior Alteration☒

Project Description:
The scope of work includes interior demolition and the building envelope (i.e. exterior walls and roof). All floors will receive some level of alteration but only where related to the exterior work necessitates. Primarily, the 70's era Main Street masonry facade will be removed and replaced with an aluminum and glass curtainwall system. The roofing will be removed the framing inspected and repaired or replaced, a skylight will be added and a new roofing system installed. Existing openings on the North and East facades, once bricked-in, will be opened and new windows installed.
The existing sprinkler system that will remain, unaltered by phase 1 and active during construction. All existing exits will remain open and active, unaltered by phase 1.
General lighting will be added and minimal HVAC to help temper the spaces in preparation of Phase II.

Status of Project:
Permitting

A complete application must be submitted to the Development Department no later than two weeks before a regularly scheduled meeting of the Design Review Board. Please contact Ellery Ammons at (901)575-0564 or ammons@downtownmemphis.com.

Owner/Applicant Signature:

Date: 11/21/2018

*Applications for properties that are located within a Landmarks Historic District may require additional approval from the Landmarks Commission. Please contact the Shelby County Division of Planning & Developement at (901) 576-6601 for more information.

18 S. MAIN

SHELL

PROJECT INFORMATION

OWNER:	18 S. MAIN MEM LLC
PROJECT NAME:	18 S. MAIN
PROJECT LOCATION:	18 S. MAIN ST. MEMPHIS, TN 38103
PROJECT DESCRIPTION:	SHELL AND CORE

DESIGN TEAM

OWNER:
18 S. MAIN MEM LLC

ARCHITECT:
DESIGNSHOP
PO BOX 42203
MEMPHIS, TN 38174
P. 901.303.8255

CIVIL ENGINEER:
DPC ENGINEERS
7975 STAGE HILLS BLVD, STE. 1
MEMPHIS, TN 38133

STRUCTURAL ENGINEER:
DPC ENGINEERS
7975 STAGE HILLS BLVD, STE. 1
MEMPHIS, TN 38133

MEP ENGINEER:
SSR INC
2650 THOUSAND OAKS BLVD #3200
MEMPHIS, TN 38118

DRAWING INDEX

GENERAL INFORMATION:
G0.1 GENERAL INFORMATION

CIVIL
C0.01 EXISTING CONDITIONS
C1.01 SITE PLAN

STRUCTURAL
S1.0 GENERAL NOTES
S1.1 SPECIAL INSPECTIONS
S2.0 FOUNDATION PLAN
S2.1 FIRST FLOOR FRAMING
S2.2 SECOND FLOOR FRAMIN
S2.3 THIRD FLOOR FRAMING
S2.4 ROOF FRAMING PLAN
S3.0 SECTIONS AND DETAILS

ARCHITECTURAL:
D0.1 BASEMENT DEMO PLAN
D0.2 FIRST FLOOR DEMO PLAN
D0.3 SECOND FLOOR DEMO PLAN
D0.4 MEZZANINE DEMO PLAN
D0.5 ROOF DEMO PLAN
A1.0 BASEMENT NEW WORK
A1.1 FIRST FLOOR NEW WORK
A1.2 SECOND FLOOR NEW WORK
A1.3 MEZZANINE FLOOR PLAN
A2.0 PLAN DETAILS
A2.1 PLAN DETAILS
A3.0 BASEMENT RCP
A3.1 FIRST FLOOR RCP
A3.2 SECOND FLOOR RCP
A3.3 MEZZANINE RCP
A4.0 NOT USED
A5.0 ROOF PLAN
A6.0 EXTERIOR ELEVATIONS
A7.0 BUILDING SECTIONS
A7.1 BUILDING SECTIONS
A8.0 SECTION DETAILS
A8.1 SECTION DETAILS
A8.2 SECTION DETAILS
A12.0 DOOR AND WINDOW SCHEDULE

MEP NARRATIVE

CODE NOTES

APPLICABLE CODES:
PERMITTED UNDER
2009 INTERNATIONAL BUILDING CODE W/ 2012 LOCAL AMENDMENTS
2012 INTERNATIONAL EXISTING BUILDING CODE W/LOCAL AMENDMENTS
2008 NATIONAL ELECTRICAL CODE LOCAL AMENDMENTS
2009 INTERNATIONAL MECHANICAL CODE LOCAL AMENDMENTS
2009 INTERNATIONAL GAS CODE LOCAL AMENDMENTS
2009 INTERNATIONAL PLUMBING CODE LOCAL AMENDMENTS
2009 INTERNATIONAL ENERGY CONSERVATION CODE LOCAL AMENDMENTS

CONSTRUCTION TYPE: III-B UNPROTECTED W/ SPRINKLER
USE GROUP: B

AREA CALCULATIONS:
FLOOR AREA

BASEMENT:	6,896 SQ FT
FIRST FLOOR:	6,942 SQ FT
SECOND FLOOR:	6,792 SQ FT
MEZZANINE:	2,215 SQ FT
TOTAL:	22,845 SQ FT

OCCUPANCY / EXITING:
NUMBER OF OCCUPANTS: (TABLE 1004.1.2)
OCCUPANT LOAD: BUSINESS (B) 100 GROSS

BASEMENT: 6,896 SQ FT/100=	69 OCCUPANTS
FIRST FLOOR: 6,942 SQ FT/100=	69 OCCUPANTS
SECOND FLOOR 6,792 SQ FT/100 =	68 OCCUPANTS
MEZZANINE: 2,215 SQ FT/100 =	22 OCCUPANTS
TOTAL:	228 OCCUPANTS*

*OCCUPANT CALCULATIONS ASSUMED, BASED ON ANTICIPATED TENANTS

NUMBER OF EXITS REQUIRED: (TABLE 1015.1)
2 MIN EACH PER FLOOR| 2 ACTUAL PER FLOOR
| MIN EACH PER MEZZANINE| 2 ACTUAL

WIDTH OF EXIT REQUIRED: (TABLE 1005.1) .2 PER OCCUPANT FOR EGRESS AND .3 PER OCCUPANT FOR STAIRS
BASEMENT: 13.8" MIN EACH | 3 @ 42", 60", AND 51"
FIRST FLOOR: 13.8" MIN EACH | 2 @ 72" AND 32"
SECOND FLOOR: 13.6" MIN EACH | 2 @ 80" AND 32"
MEZZANINE: 4.4" MIN EACH | 2 @ 36" (MIN) EACH

LENGTH OF DEAD END CORRIDOR: (1018.4) 20' MAX. | NOT APPLICABLE
EXIT ACCESS DISTANCE: (TABLE 1016.1) 300 FT MAX | 130 FT ACTUAL

FIRE RESISTANCE RATINGS:
(TABLE 601)
STRUCTURAL FRAME: 0-HOUR EXISTING
EXTERIOR BEARING WALL: 0-HOUR EXISTING
INTERIOR BEARING WALLS: 2-HOUR EXISTING
INTERIOR NONBEARING WALLS: 0-HOUR EXISTING
FLOOR & ROOF CEILING ASSEMBLY: 0-HOUR EXISTING
ROOF & ROOF/CEILING ASSEMBLY: 0-HOUR EXISTING

INTERIOR FINISHES
ALL INTERIOR FINISHES - N/A - SHELL PACKAGE ONLY

PLUMBING:
WATER CLOSETS:
N/A - SHELL PACKAGE ONLY

LAVATORIES:
N/A - SHELL PACKAGE ONLY

DRINKING FOUNTAIN:
N/A - SHELL PACKAGE ONLY

SERVICE SINKS:
N/A - SHELL PACKAGE ONLY

VICINITY MAP

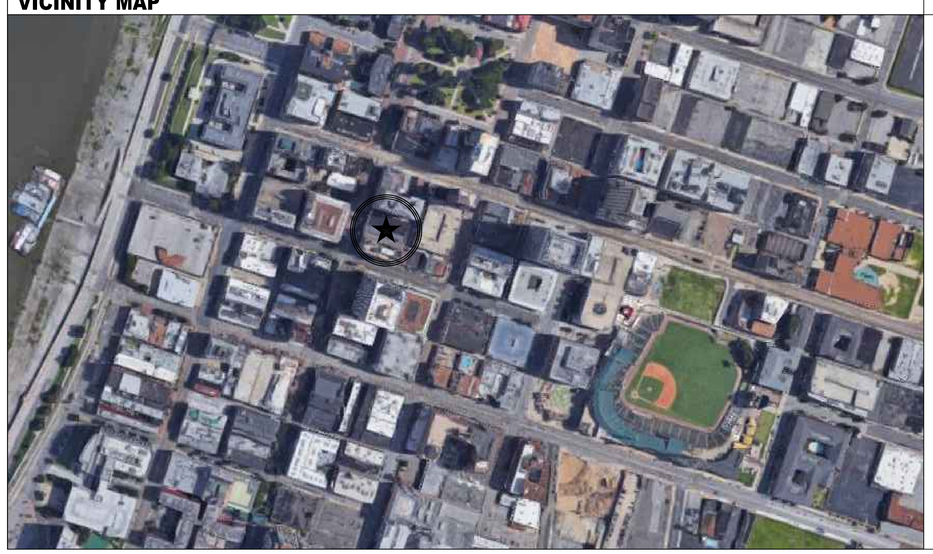

ABBREVIATIONS

———	CENTER LINE
℄	CENTER LINE
Ø	ROUND OR DIAMETER
&	AND
A.F.F.	ANGLE
A.C.T.	SQUARE
A.F.F.	ABOVE FINISHED FLOOR
ALUM.	ALUMINUM
BD.	BOARD
BLK'G.	BLOCKING
BOT.	BOTTOM
BYND.	BEYOND
C.J.	CONTROL JOINT
CLG.	CEILING
CLSR.	CLOSER
C.M.U.	CONCRETE MASONRY UNIT
C.O.	CASED OPENING
COL.	COLUMN
CONC.	CONCRETE
CONT.	CONTINUOUS
CORR.	CORRIDOR
CORR.	CORRUGATED
CPT.	CARPET
C.T.	CERAMIC TILE
DBL.	DOUBLE
DEMO.	DEMOLITION
DIA.	DIAMETER
DN.	DOWN
DTL.	DETAIL
EA.	EACH
E.I.F.S.	EXTERIOR INSULATION FINISH SYSTEM
E.J.	EXPANSION JOINT
ELECT.	ELECTRICAL
ELEV.	ELEVATION
ELEV.	ELEVATOR
ENLG'D.	ENLARGED
EQUIP.	EQUIPMENT
E.W.	EACH WAY
E.W.C.	ELECTRIC WATER COOLER
EXIST.	EXISTING
EXP.	EXPANSION
F.D.	FLOOR DRAIN
F.E.	FIRE EXTINGUISHER
F.F.E.	FINISHED FLOOR ELEVATION
FIN.	FINISH
FLR.	FLOOR
FURR'G.	FURRING
GA.	GAUGE
G.W.B.	GYPSUM WALL BOARD
GYP.	GYPSUM
HD	HAND DRYER
HM	HOLLOW METAL
HTS.	HEIGHTS
I.D.	INSIDE DIAMETER
INSUL.	INSULATION
JT.	JOINT
LARCH.	LANDSCAPE ARCHITECT
LAV.	LAVATORY
LOW.	LOWER
LYRS.	LAYERS
MANUF.	MANUFACTURER
MAT.	MATERIAL
MAX.	MAXIMUM
MECH.	MECHANICAL
MEMB.	MEMBRANE
MIN.	MINIMUM
MIN.	MINUTE
MOD. BIT.	MODIFIED BITUMEN
M.R.	MOISTURE RESISTANT
MTL.	METAL
MULL.	MULLION
N.I.C.	NOT IN CONTRACT
NO.	NUMBER
NOM.	NOMINAL
O.C.	ON CENTER
O.D.	OUTSIDE DIAMETER
OPEN'G.	OPENING
OPP.	OPPOSITE
O.S.C.I.	OWNER SUPPLIED CONTRACTOR INSTALLED
O.S.O.I.	OWNER SUPPLIED OWNER INSTALLED
PERF.	PERFORATED
PLUMB.	PLUMBING
PORC.	PORCELAIN
PRE-FIN.	PRE-FINISHED
PROG.	PROGRAMMING
P.T.	PORCELAIN TILE
PTD.	PAINTED
Q.T.	QUARRY TILE
REF.	REFER
REINF.	REINFORCING
REQ'D.	REQUIRED
REQ'MENTS	REQUIREMENTS
RESIL.	RESILIENT
RM.	ROOM
R.O.	ROUGH OPENING
S.B.C.	STANDARD BUILDING CODE
SCHED.	SCHEDULE
ST.	STAIN / STAINED
S.T.C.	SOUND TRANSMISSION COEFFICIENT
STD.	STANDARD
STL.	STEEL
STRUCT.	STRUCTURAL
TRTD.	TREATED
TYP.	TYPICAL
U.N.O.	UNLESS NOTED OTHERWISE
V.C.T.	VINYL COMPOSITION TILE
V.I.F.	VERIFY IN FIELD
V.W.C.	VINYL WALL COVERING
WD.	WOOD
WIN.	WINDOW
W.S.	WEATHER STRIPPING

GENERAL NOTES

1. ALL CONSTRUCTION SHALL COMPLY WITH APPLICABLE BUILDING CODES AND LOCAL RESTRICTIONS. CONTRACTORS MUST COMPLY WITH CONTRACTOR REGISTRATION REQUIREMENTS OF ALL GOVERNING AUTHORITIES. ALL REQUIRED CITY, COUNTY, STATE PERMITS SHALL BE ACQUIRED AND PAID FOR BY THE GENERAL CONTRACTOR OR BY THE TRADE SPECIFIC RESPONSIBLE SUBCONTRACTOR.
2. ALL CONSTRUCTION SETS ON SITE SHALL REFLECT THE SAME INFORMATION. CONTRACTOR SHALL MAINTAIN ONE COMPLETE SET OF PLANS ON SITE AT ALL TIMES. THIS SHALL INCLUDE ALL WORKING DRAWINGS (PLANS, SUPPLEMENTAL DRAWINGS, SPECIFICATIONS/DATA SHEETS, ADDENDA, REVISIONS), PROPOSED CHANGE ORDERS (PCO) AND CHANGE ORDERS.
3. DISCREPANCIES DISCOVERED BETWEEN PORTIONS OF CONTRACT DOCUMENTS ARE NOT INTENDED. CONTRACTOR TO CLARIFY DISCREPANCY WITH ARCHITECT BEFORE COMMENCING WORK.
4. STATED DIMENSIONS TAKE PRECEDENCE OVER GRAPHICS. DO NOT SCALE DRAWINGS.
5. IT SHALL BE THE RESPONSIBILITY OF THE CONTRACTOR TO LOCATE ALL EXISTING UTILITIES AND PROTECT THEM FROM DAMAGE. CONTRACTORS SHALL BEAR THE EXPENSE OR REPLACEMENT OF UTILITIES OR OTHER PROPERTY DAMAGE BY OPERATIONS IN CONJUNCTION WITH THE EXECUTION OF THE WORK.
6. CONTRACTOR SHALL ACCEPT ALL RESPONSIBILITY AND LIABILITY OF CONSTRUCTION METHODS AND PROPER OPERATION OF ALL MECHANICAL, PLUMBING AND ELECTRICAL SYSTEMS.
7. GENERAL NOTES APPLY REGARDLESS OF WHETHER OR NOT THEY ARE KEYED ON EVERY SHEET OR TO A SPECIFIC DETAIL.
8. WORK INDICATED HEREIN, BUT NOT NOTED OR REFERENCED COMPLETELY, SHALL BE PERFORMED AT NO ADDITIONAL CHARGE TO THE OWNER/TENANT.
9. CONTRACTOR SHALL FURNISH ALL MATERIALS AND LABOR TO MAKE THE WORK COMPLETE IN EVERY RESPECT AS SPECIFIED HEREIN, SHOWN ON DRAWINGS, OR REASONABLY IMPLIED TO COMPLETE THE CONSTRUCTION.
10. CONTRACTOR TO PROVIDE TEMPORARY POWER AND WATER AS REQUIRED.

designshop
p.o. box 42203
memphis, tn 38174
901.303.8255

ARCHITECT OF RECORD SEAL:

NOT FOR CONSTRUCTION FOR REVIEW ONLY

JOB NUMBER
18016

REVISIONS
DATE DESCRIPTION

PROJECT TITLE
18 S. Main

SHELL

18 S. Main St.
Memphis, TN 38103

DRAWING NAME
General Information

This drawing has been prepared under the architects supervision. The architect disclaims any responsibility for the existing building structure, existing site conditions, existing construction elements, and any drawings or documents used for this project that are not signed and sealed by the architect.

This information herein is of proprietary nature and is submitted in confidence for the use of our clients only. Unauthorized reproduction, distribution, or dissemination, in whole or in part, is prohibited. The information contained herein is and remains the property of designSHOP and receipt or possession of this information confers no right in or license to disclose to others the subject matter contained herein for any but authorized purposes. All rights reserved. Copyright 2018.

DATE
07 . NOV . 2018
PHASE
REVIEW SET
DRAWING NUMBER

G0.1

GENERAL DEMOLITION NOTES

1. CONTRACTOR TO FIELD VERIFY NOTED AREAS OF NEW FINISHES TO DETERMINE ACTUAL SCOPE OF REQUIRED DEMOLITION TO ACHIEVE RENOVATION/INFILL PROJECT AS DESIGNED.
2. COORDINATE ALL PHASES OF PROJECT WITH OWNER PRIOR TO START OF WORK.
3. CONTRACTOR TO PROVIDE SUFFICIENT PROTECTION WITHIN AND BEYOND DEMOLITION AREAS TO ELIMINATE ANY RISK TO CONSTRUCTION PERSONNEL OR THIRD - PARTY INDIVIDUALS.
4. BOLD DASHED LINES ON DEMOLITION PLAN INDICATE EXISTING WALL CONDITIONS TO BE REMOVED.
5. IF UNANTICIPATED MECHANICAL, PLUMBING, ELECTRICAL, OR STRUCTURAL ELEMENTS, OR ANY OTHER CONDITIONS ARE ENCOUNTERED WHICH MIGHT CONFLICT WITH THE INTENDED FUNCTION/DESIGN OF THE PROJECT, CONTACT ARCHITECT IMMEDIATELY FOR CLARIFICATION.
6. THE CONTRACTOR IS RESPONSIBLE FOR CONDUCTING DEMOLITION OPERATIONS SO AS TO PREVENT DAMAGE TO ADJACENT BUILDINGS, STRUCTURES AND OTHER FACILITIES AND INJURY TO PERSONS. THE CONTRACTORS SHALL ALSO COORDINATE WITH LOCAL CODE OFFICIALS TO VERIFY THAT DEMO OPERATIONS ARE CONDUCTED IN COMPLIANCE WITH ALL APPLICABLE CODES.
7. PROVIDE REQUIRED SHORING AND BRACING FOR ITEMS TO REMAIN WHICH OCCUR ABOVE OR ADJACENT TO ITEMS TO BE DEMOLISHED. MAINTAIN STRUCTURAL INTEGRITY OF THE BUILDING.
8. MAINTAIN RATINGS FOR DOORS AND WALLS AT ALL INTERSECTIONS, CONNECTIONS, AND PENETRATIONS AS REQUIRED FOR APPLICABLE BUILDING CODES.
9. DEBRIS RESULTING FROM DEMOLITION AND CONSTRUCTION SHALL BE REMOVED DAILY FROM THE CONSTRUCTION SITE TO A WASTE AREA PROVIDED BY THE CONTRACTOR AND IN COORDINATION WITH OWNER.
10. PROMPTLY REPAIR ANY DAMAGE CAUSED TO ADJACENT FACILITIES OR OTHER TENANT SPACES BY DEMO OPERATIONS.
11. THE CONTRACTOR SHALL PROVIDE AND MAINTAIN ALL EXITS, ADEQUATE EXIT LIGHTING, FIRE PROTECTION DEVICES, AND ALARMS TO CONFORM TO LOCAL BUILDING CODE REQUIREMENTS.
12. CONTRACTOR TO REMOVE ALL UNUSED WATER SUPPLY AND DRAIN LINES THROUGHOUT. PATCH ALL ASSOCIATED FOR PENETRATION SMOOTH TO RECEIVE NEW FINISHES AND, IF REQUIRED TO PRESERVE EXISTING RATED SEPARATIONS, TO MAINTAIN THE INTEGRITY.
13. REPAIR WALL SURFACES AS REQUIRED FOR PREP AND FINISH BY OTHERS.
14. REMOVE AND DISPOSE OF ALL EXISTING MILLWORK AND BUILT IN FURNITURE.
15. REMOVE ALL LOOSE AND CHALKY PLASTER DOWN TO THE BRICK FROM EXISTING WALLS TO REMAIN
16. ANY PAINT REMOVED SHALL BE TESTED FOR LEAD PRIOR TO REMOVAL. IF LEAD IS DETECTED, PAINT SHALL BE REMOVED ACCORDING TO PROCEDURES SET FORTH BY THE E.P.A. UNDER THE RENOVATION, REPAIR, & PAINTING PROGRAM.
17. THE CONTRACTOR SHALL RETAIN THE SERVICES OF A TESTING AGENCY TO TEST FOR ASBESTOS PRIOR TO DEMOLITION, IF FOUND. THE CONTRACTOR SHALL ABATE ALL ASBESTOS FROM THE BUILDING PRIOR TO THE START OF DEMOLITION AND PROVIDE THE OWNER WITH APPROVED DOCUMENTATION ACCORDING TO THE E.P.A. AND OSHA THAT ALL ASBESTOS HAS BEEN REMOVED AND THE BUILDING IS SAFE TO OCCUPY.
18. ALL DEMOLITION OF EXTERIOR WALLS, EXTERIOR COLUMNS, AND SLOPED EXTERIOR AND INTERIOR FLOORING (ALONG MAIN ST.) IS PENDING COMPLETION OF FINAL DESIGN DOCUMENTS. DO NOT REMOVE UNTIL FINAL DESIGN DOCUMENTS ARE ISSUED.
19. PROVIDE TEMPORAY PANELS OVER ALL EXPOSED DOORS/WINDOW OPENINGS BETWEEN DEMO AND INSTALLATION OF NEW.
20. BUILDING SHALL BE SECURED AT ALL TIMES.

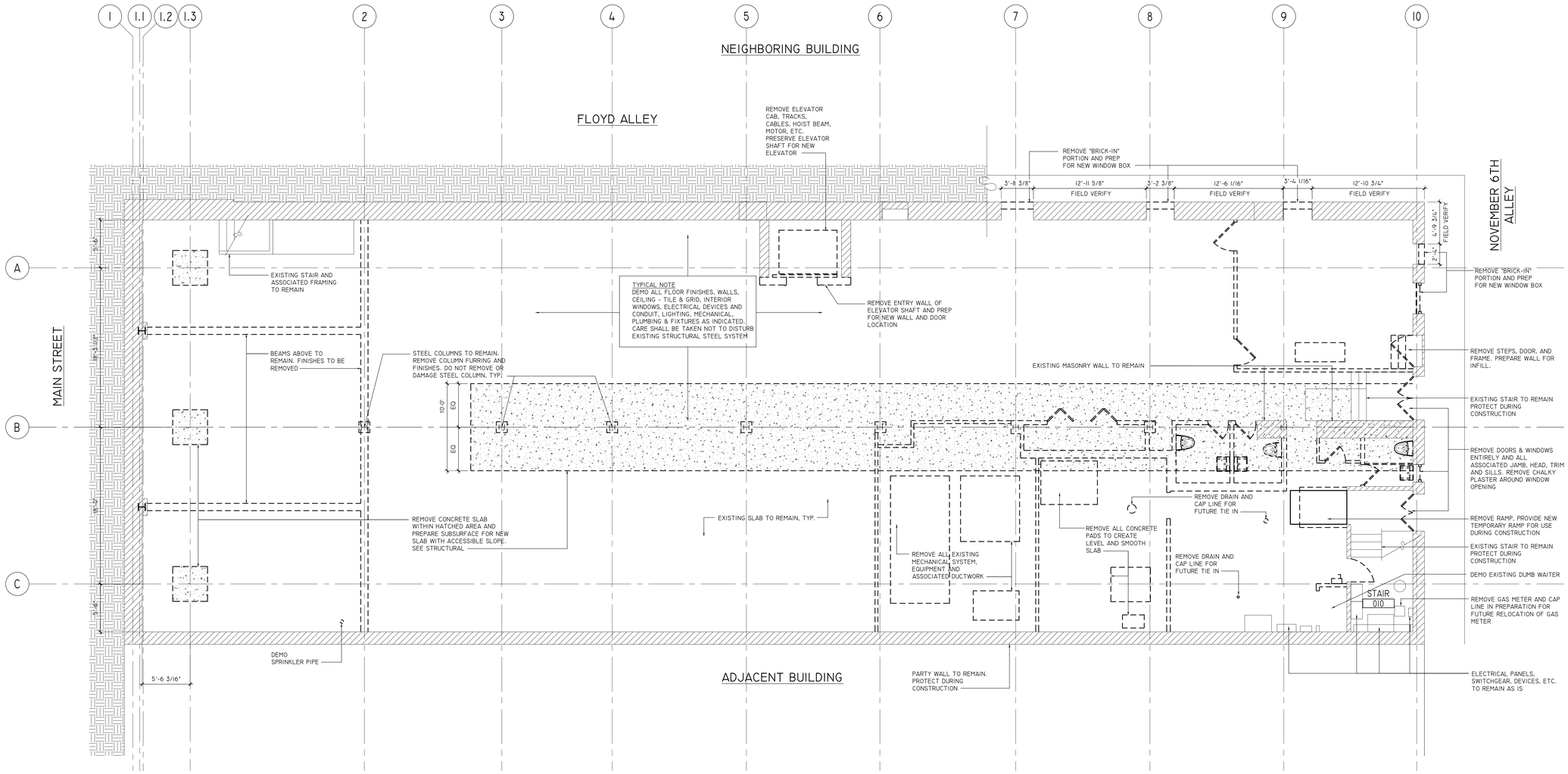

A1 Basement Demo Plan

SCALE: 3/16"=1'-0"

designshop
p.o. box 42203
memphis, tn 38174
901.303.8255

ARCHITECT OF RECORD SEAL:

NOT FOR CONSTRUCTION FOR REVIEW ONLY

JOB NUMBER

18016

REVISIONS

DATE	DESCRIPTION

PROJECT TITLE

18 S. Main

SHELL

18 S. Main St.
Memphis, TN 38103

DRAWING NAME

Basement Demo Plan

This drawing has been prepared under the architects supervision. The architect disclaims any responsibility for the existing building structure, existing site conditions, existing construction elements, and any drawings or documents used for this project that are not signed and sealed by the architect.

This information herein is of proprietary nature and is submitted in confidence for the use of our clients only. Unauthorized reproduction, distribution, or dissemination, in whole or in part, is prohibited. The information contained herein is and remains the property of designSHOP and receipt or possession of this information confers no right in or license to disclose to others the subject matter contained herein for any but authorized purposes. All rights reserved. Copyright 2018.

DATE

07 . NOV . 2018

PHASE

REVIEW SET

DRAWING NUMBER

D0.1

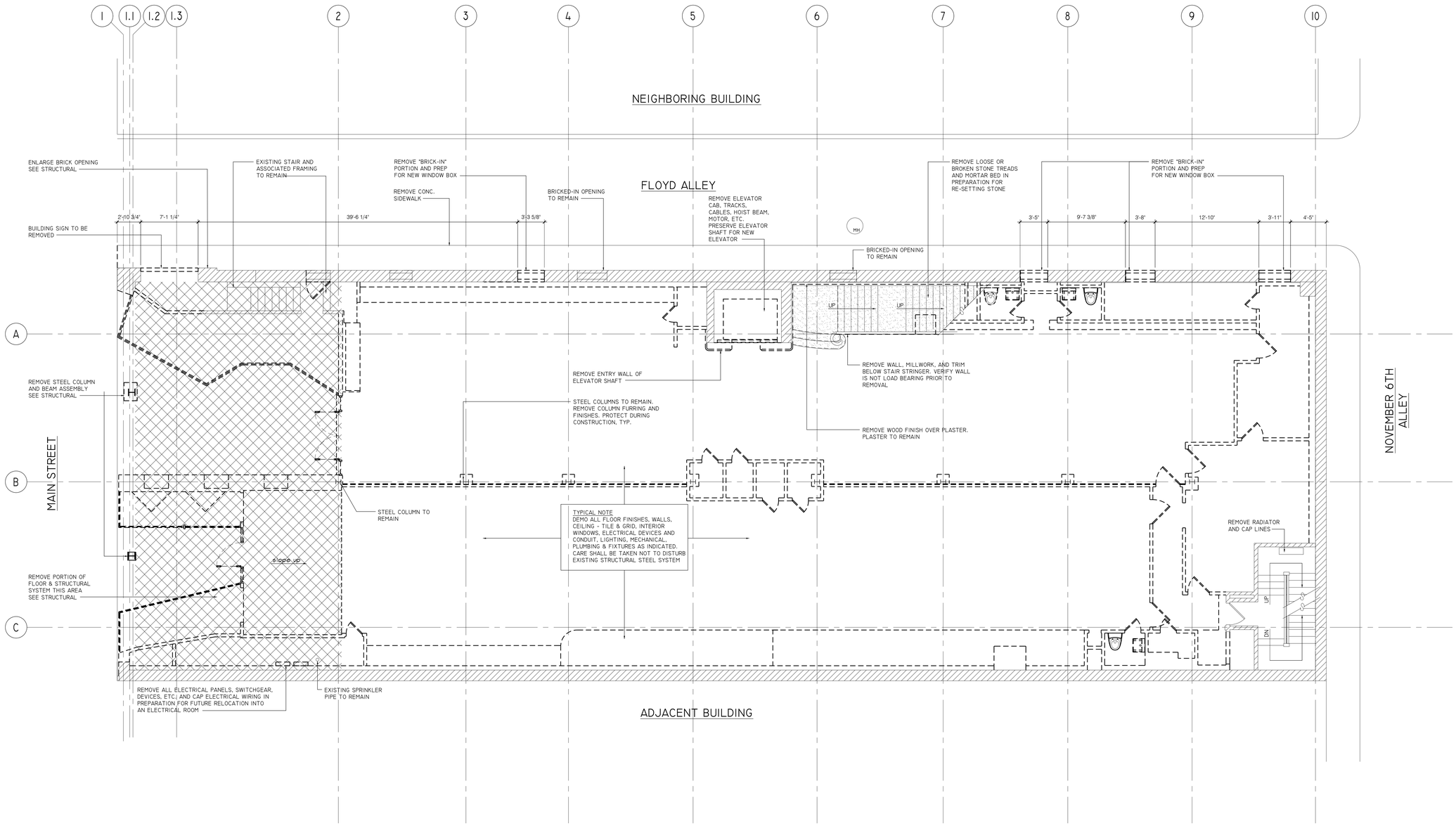

A1 First Floor Demo Plan
SCALE: 3/16"=1'-0"

designshop
p.o. box 42203
memphis, tn 38174
901.303.8255

ARCHITECT OF RECORD SEAL:

NOT FOR CONSTRUCTION FOR REVIEW ONLY

JOB NUMBER
18016

REVISIONS
DATE DESCRIPTION

PROJECT TITLE
18 S. Main

SHELL

18 S. Main St.
Memphis, TN 38103

DRAWING NAME
First Floor Demo Plan

This drawing has been prepared under the architect's supervision. The architect disclaims any responsibility for the existing building structure, existing site conditions, existing construction elements, and any drawings or documents used for this project that are not signed and sealed by the architect.

This information herein is of proprietary nature and is submitted in confidence for the use of our clients only. Unauthorized reproduction, distribution, or dissemination, in whole or in part, is prohibited. The information contained herein is and remains the property of designSHOP and receipt or possession of this information confers no right in or license to disclose to others the subject matter contained herein for any but authorized purposes. All rights reserved. Copyright 2018.

DATE
07 . NOV . 2018
PHASE
REVIEW SET
DRAWING NUMBER
D0.2

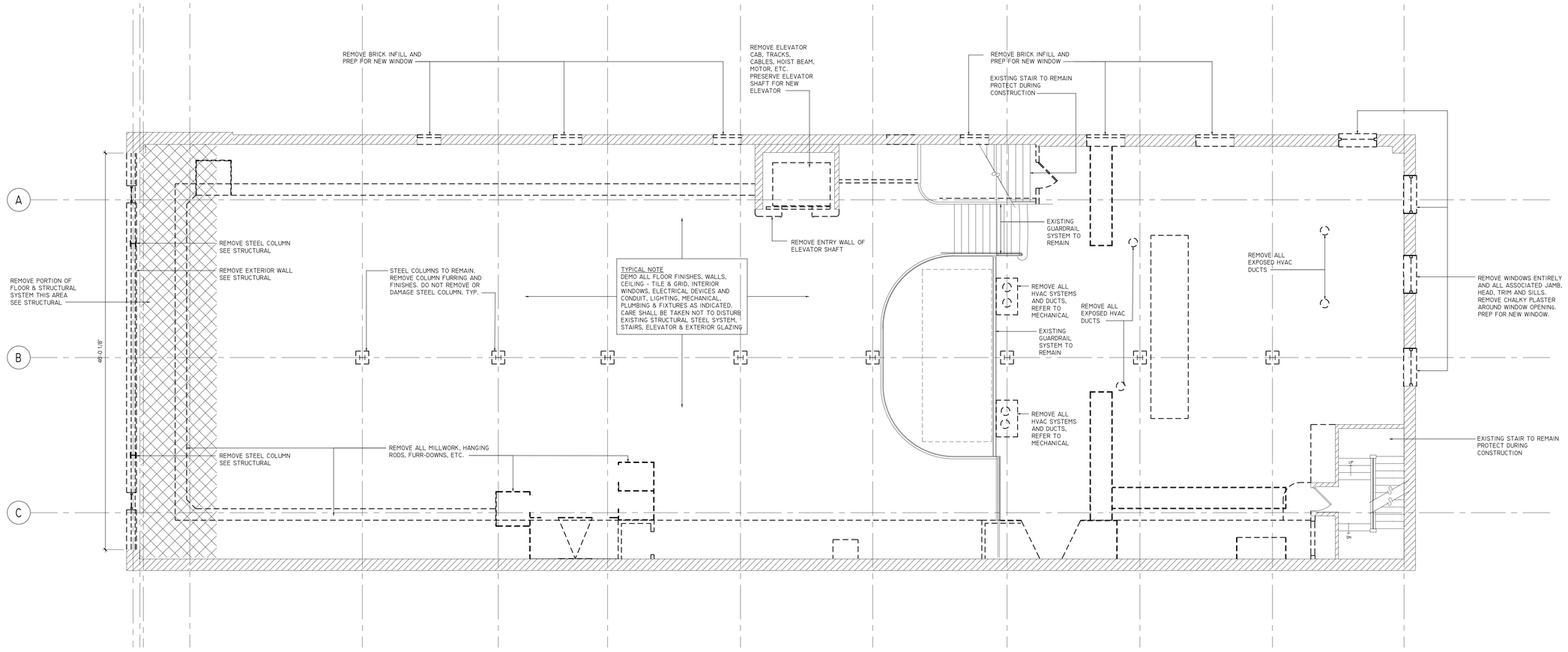

A1 Second Floor Demo Plan
SCALE: 3/16"=1'-0"

designshop
p.o. box 42203
memphis, tn 38174
901.303.8255

ARCHITECT OF RECORD SEAL:

NOT FOR CONSTRUCTION FOR REVIEW ONLY

JOB NUMBER
18016

REVISIONS
DATE DESCRIPTION

PROJECT TITLE
18 S. Main

SHELL

18 S. Main St.
Memphis, TN 38103

DRAWING NAME
Second Floor Demo Plan

This drawing has been prepared under the architect's supervision. The architect disclaims any responsibility for the existing building structure, existing site conditions, existing construction elements, and any drawings or documents used for this project that are not signed and sealed by the architect.

This information herein is of proprietary nature and is submitted in confidence for the use of our clients only. Unauthorized reproduction, distribution, or dissemination, in whole or in part, is prohibited. The information contained herein is and remains the property of designSHOP and receipt or possession of this information confers no right in or license to disclose to others the subject matter contained herein for any but authorized purposes. All rights reserved. Copyright 2018.

DATE
07 . NOV . 2018
PHASE
REVIEW SET
DRAWING NUMBER
D0.3

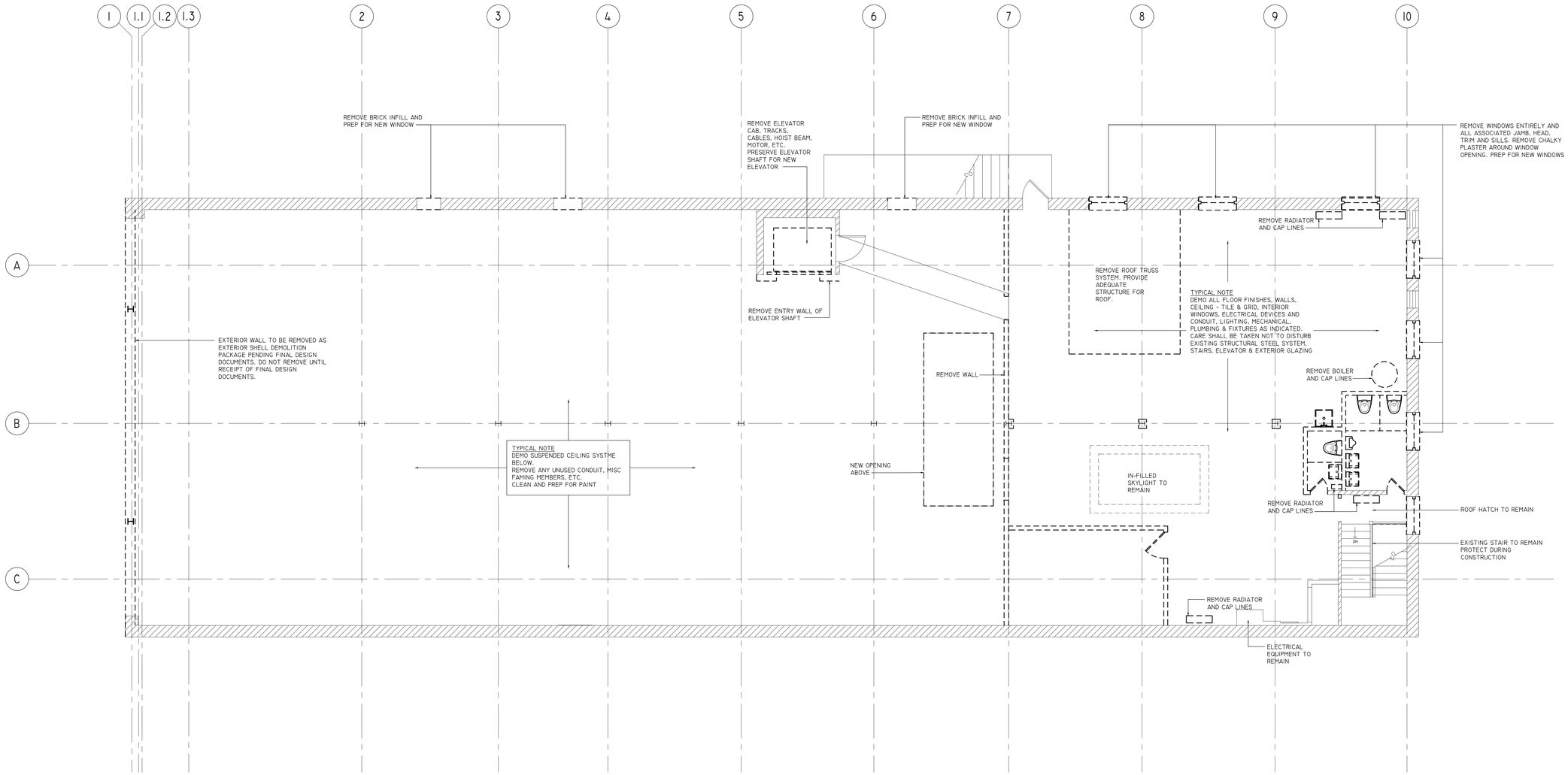

A1 Mezzanine Demo Plan
SCALE: 3/16"=1'-0"

designshop
p.o. box 42203
memphis, tn 38174
901.303.8255

ARCHITECT OF RECORD SEAL:

NOT FOR CONSTRUCTION FOR REVIEW ONLY

JOB NUMBER

18016

REVISIONS
DATE DESCRIPTION

PROJECT TITLE

18 S. Main

SHELL

18 S. Main St.
Memphis, TN 38103

DRAWING NAME

Mezzanine Demo Plan

This drawing has been prepared under the architect's supervision. The architect disclaims any responsibility for the existing building structure, existing site conditions, existing construction elements, and any drawings or documents used for this project that are not signed and sealed by the architect.

This information herein is of proprietary nature and is submitted in confidence for the use of our clients only. Unauthorized reproduction, distribution, or dissemination, in whole or in part, is prohibited. The information contained herein is and remains the property of designSHOP and receipt or possession of this information confers no right in or license to disclose to others the subject matter contained herein for any but authorized purposes. All rights reserved. Copyright 2018.

DATE

07 . NOV . 2018

PHASE

REVIEW SET

DRAWING NUMBER

D0.4

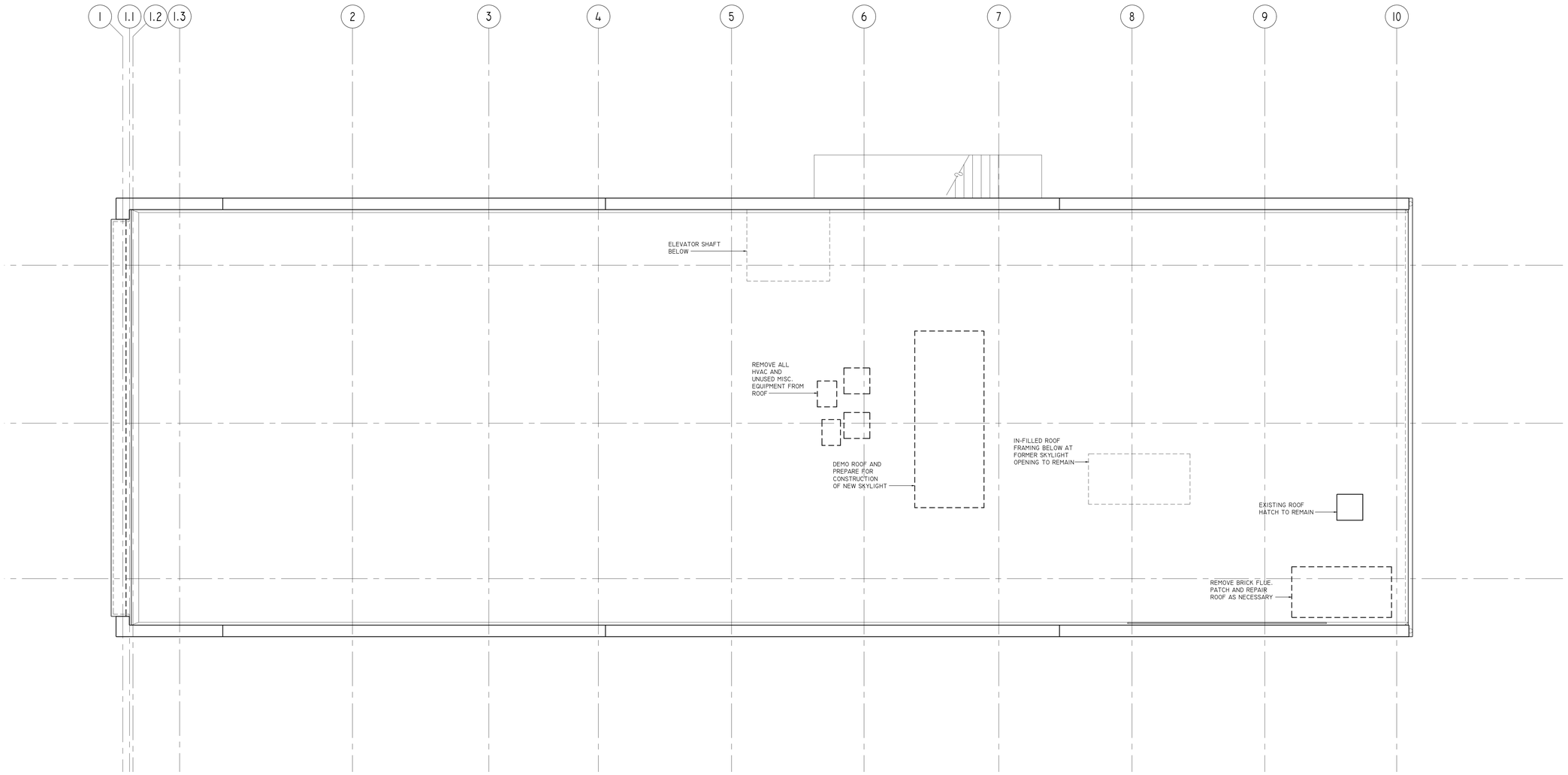

A1 Roof Demo Plan
SCALE: 1/4"=1'-0"

designshop
p.o. box 42203
memphis, tn 38174
901.303.8255

ARCHITECT OF RECORD SEAL:

NOT FOR CONSTRUCTION FOR REVIEW ONLY

JOB NUMBER
18016

REVISIONS
DATE DESCRIPTION

PROJECT TITLE
18 S. Main

SHELL

18 S. Main St.
Memphis, TN 38103

DRAWING NAME
Roof
Demo Plan

This drawing has been prepared under the architect's supervision. The architect disclaims any responsibility for the existing building structure, existing site conditions, existing construction elements, and any drawings or documents used for this project that are not signed and sealed by the architect.

This information herein is of proprietary nature and is submitted in confidence for the use of our clients only. Unauthorized reproduction, distribution, or dissemination, in whole or in part, is prohibited. The information contained herein is and remains the property of designSHOP and receipt or possession of this information confers no right in or license to disclose to others the subject matter contained herein for any but authorized purposes. All rights reserved. Copyright 2018.

DATE
07 . NOV . 2018
PHASE
REVIEW SET
DRAWING NUMBER
D0.5

GENERAL PLAN NOTES:

1. ALL DIMENSIONS ARE FROM FACE OF STUDS TO FACE OF STUDS OR TO COLUMN CENTERLINES UNLESS OTHERWISE NOTED.
2. ALL NEW STUD FRAMING SHALL BE LIGHT GAUGE STEEL FRAMING WITH THE GAUGE DETERMINED BY ENGINEERS OF THE LIGHT GAUGE FRAMING PROVIDER.
3. STUDS WHICH ARE NOT DIMENSIONED SHALL BE 3-5/8" TYPICAL.
4. ALL PUNCHED OPENINGS IN NORTH AND EAST FACADE TO BE IN EXISTING OPENING.
5. ALL NEW STEEL STRUCTURE TO BE PAINTED WHITE.
6. ALL STOREFRONT AND CURTAIN WALL MULLIONS TO BE ANODIZED WHITE.

EXISTING SHELL & CORE TO REMAIN

NEW WALL - 3 5/8 STUD WITH 5/8" GYP. BD. BOTH SIDES, TYP.

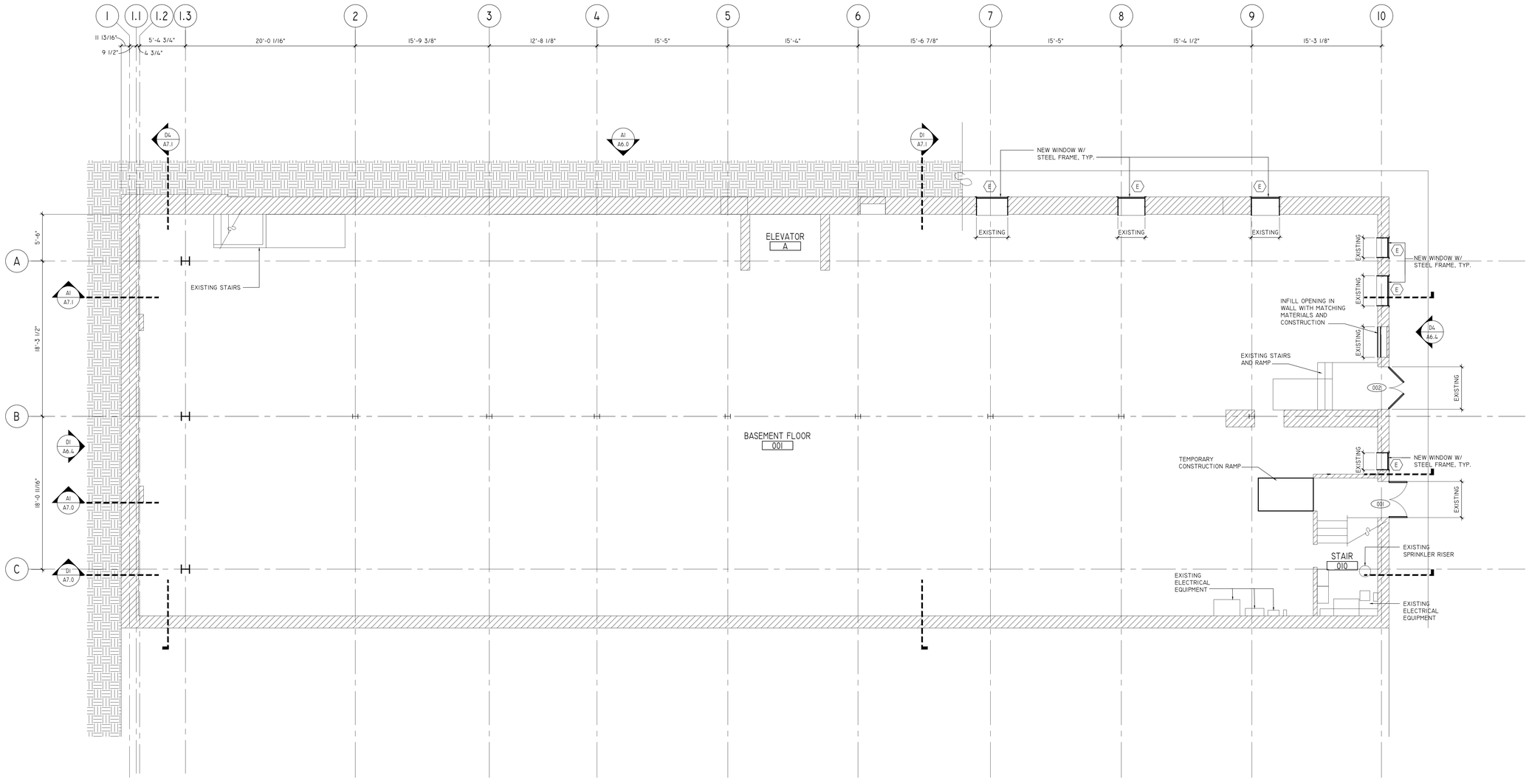

A1 Basement Floor Plan

SCALE: 3/16"=1'-0"

designshop
p.o. box 42203
memphis, tn 38174
901.303.8255

ARCHITECT OF RECORD SEAL:

NOT FOR CONSTRUCTION FOR REVIEW ONLY

JOB NUMBER

18016

REVISIONS
DATE DESCRIPTION

PROJECT TITLE

18 S. Main

SHELL

18 S. Main St.
Memphis, TN 38103

DRAWING NAME

Basement Floor Plan

This drawing has been prepared under the architect's supervision. The architect disclaims any responsibility for the existing building structure, existing site conditions, existing construction elements, and any drawings or documents used for this project that are not signed and sealed by the architect.

This information herein is of proprietary nature and is submitted in confidence for the use of our clients only. Unauthorized reproduction, distribution, or dissemination, in whole or in part, is prohibited. The information contained herein is and remains the property of designSHOP and receipt or possession of this information confers no right in or license to disclose to others the subject matter contained herein for any but authorized purposes. All rights reserved. Copyright 2018.

DATE

07 . NOV . 2018

PHASE

REVIEW SET

DRAWING NUMBER

A1.0

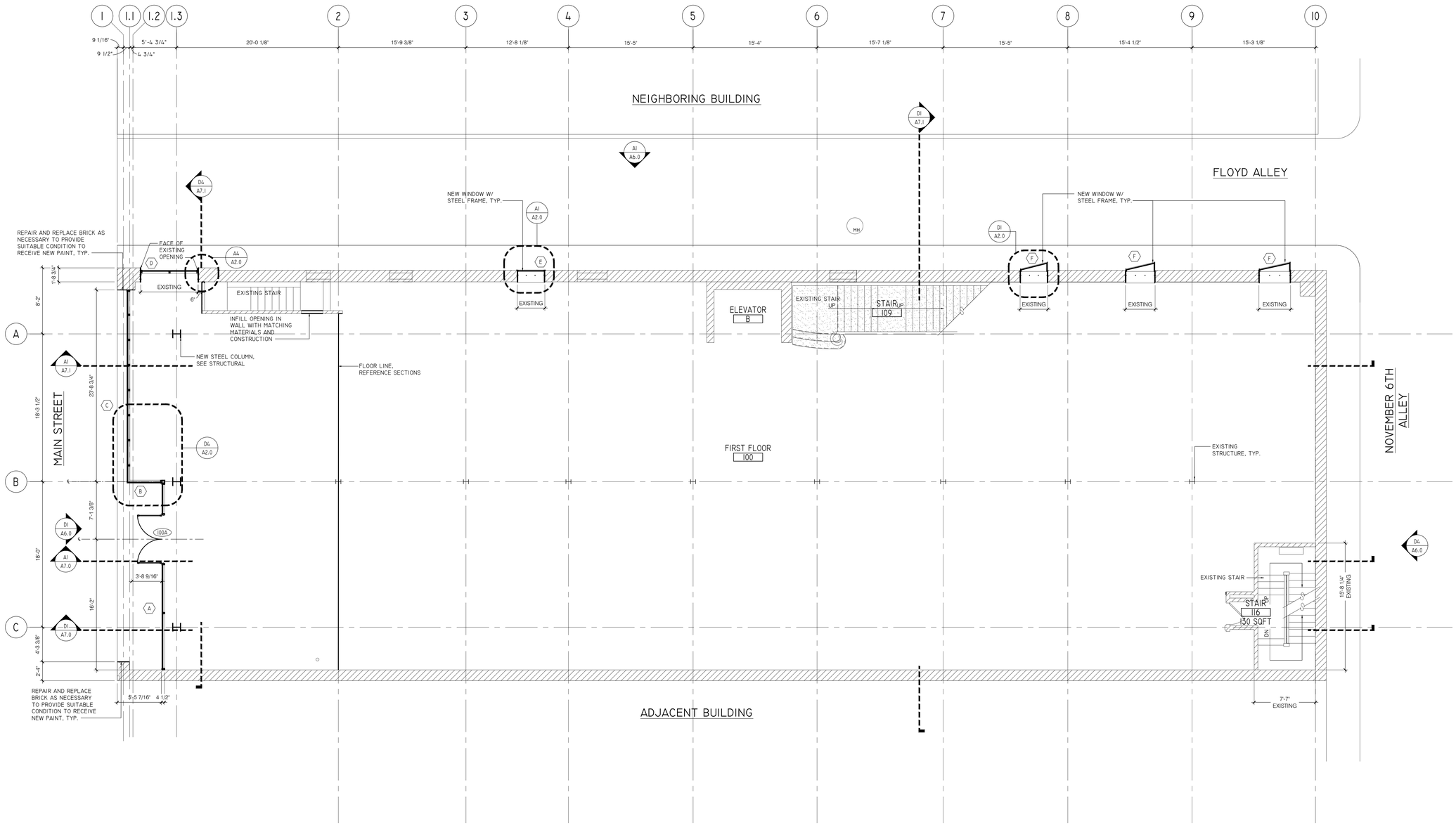

A1 First Floor Plan

SCALE: 3/16"=1'-0"

designshop
p.o. box 42203
memphis, tn 38174
901.303.8255

ARCHITECT OF RECORD SEAL:

NOT FOR CONSTRUCTION FOR REVIEW ONLY

JOB NUMBER

18016

REVISIONS
DATE DESCRIPTION

PROJECT TITLE

18 S. Main

SHELL

18 S. Main St.
Memphis, TN 38103

DRAWING NAME

First Floor
New Work Plan

This drawing has been prepared under the architect's supervision. The architect disclaims any responsibility for the existing building structure, existing site conditions, existing construction elements, and any drawings or documents used for this project that are not signed and sealed by the architect.

This information herein is of proprietary nature and is submitted in confidence for the use of our clients only. Unauthorized reproduction, distribution, or dissemination, in whole or in part, is prohibited. The information contained herein is and remains the property of designSHOP and receipt or possession of this information confers no right in or license to disclose to others the subject matter contained herein for any but authorized purposes. All rights reserved. Copyright 2018.

DATE

07 . NOV . 2018
PHASE

REVIEW SET
DRAWING NUMBER

A1.1

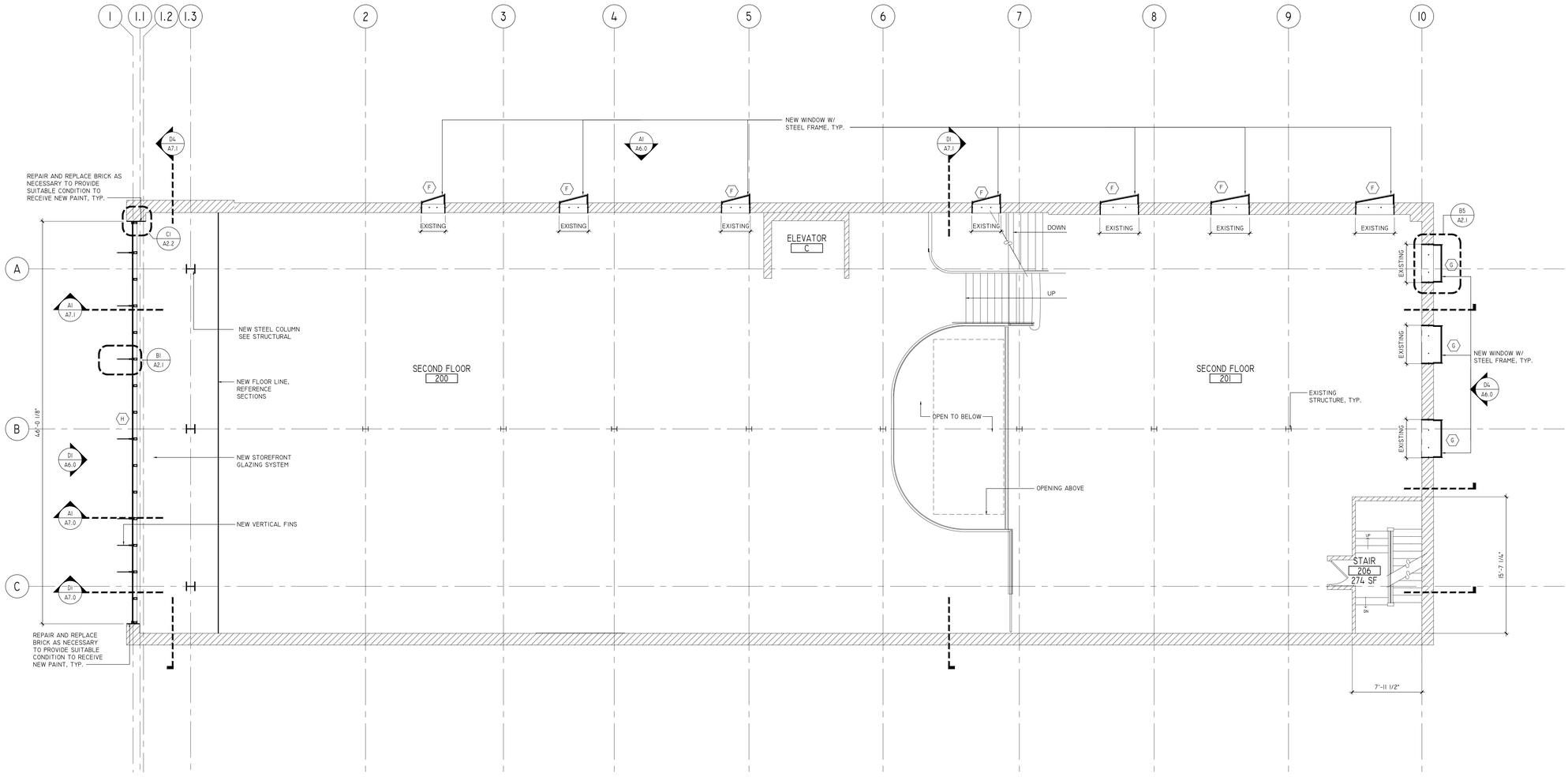

A1 Second Floor Plan

SCALE: 3/16"=1'-0"

designshop
p.o. box 42203
memphis, tn 38174
901.303.8255

ARCHITECT OF RECORD SEAL:

NOT FOR CONSTRUCTION FOR REVIEW ONLY

JOB NUMBER

18016

REVISIONS

DATE	DESCRIPTION

PROJECT TITLE

18 S. Main

SHELL

18 S. Main St.
Memphis, TN 38103

DRAWING NAME

Second Floor New Work Plan

This drawing has been prepared under the architect's supervision. The architect disclaims any responsibility for the existing building structure, existing site conditions, existing construction elements, and any drawings or documents used for this project that are not signed and sealed by the architect.

This information herein is of proprietary nature and is submitted in confidence for the use of our clients only. Unauthorized reproduction, distribution, or dissemination, in whole or in part, is prohibited. The information contained herein is and remains the property of designSHOP and receipt or possession of this information confers no right in or license to disclose to others the subject matter contained herein for any but authorized purposes. All rights reserved. Copyright 2018.

DATE

07 . NOV . 2018

PHASE

REVIEW SET

DRAWING NUMBER

A1.2

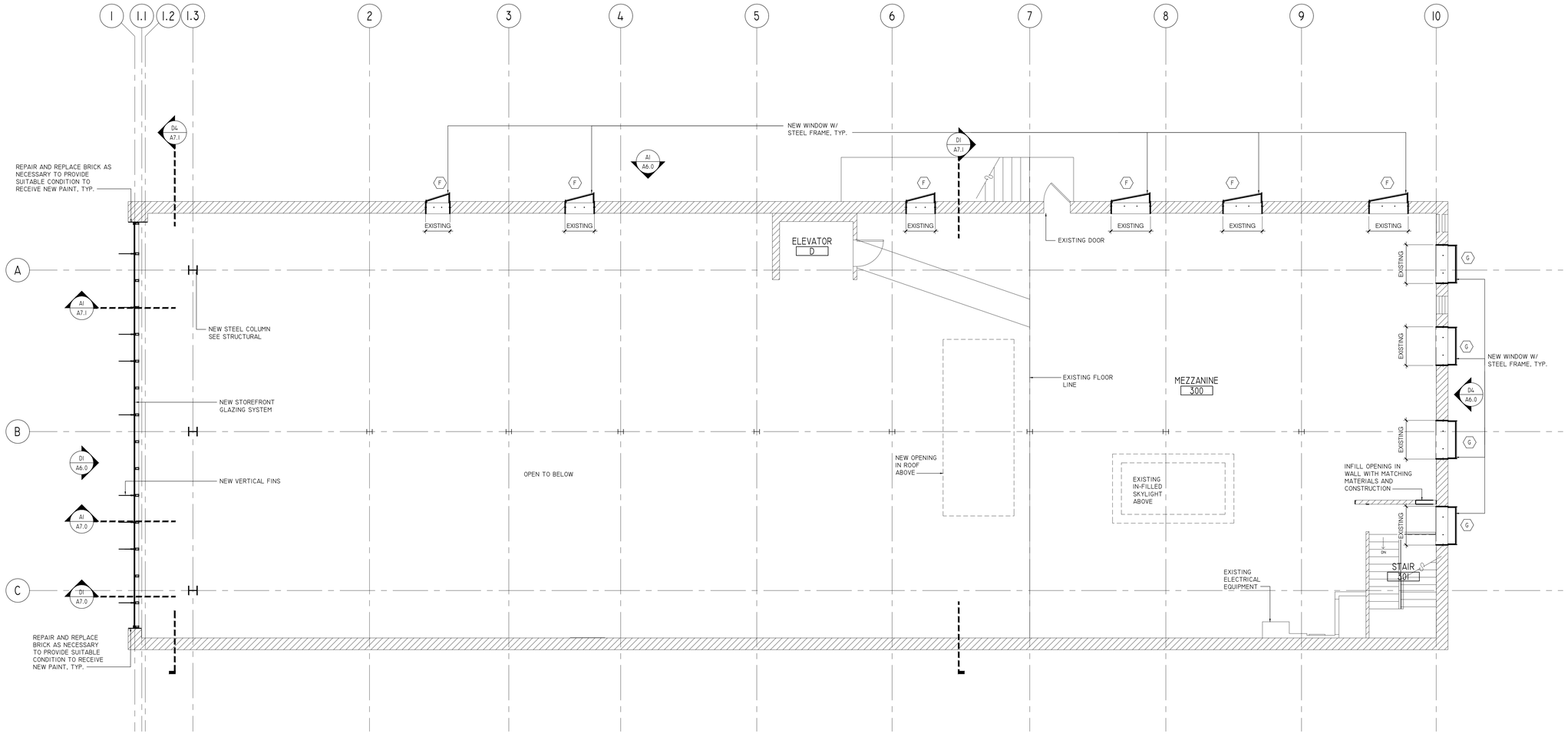

A1 Mezzanine Plan
SCALE: 3/16"=1'-0"

designshop
p.o. box 42203
memphis, tn 38174
901.303.8255

ARCHITECT OF RECORD SEAL:

NOT FOR CONSTRUCTION FOR REVIEW ONLY

JOB NUMBER
18016

REVISIONS
DATE DESCRIPTION

PROJECT TITLE
18 S. Main

SHELL

18 S. Main St.
Memphis, TN 38103

DRAWING NAME
Mezzanine Floor Plan

This drawing has been prepared under the architect's supervision. The architect disclaims any responsibility for the existing building structure, existing site conditions, existing construction elements, and any drawings or documents used for this project that are not signed and sealed by the architect.

This information herein is of proprietary nature and is submitted in confidence for the use of our clients only. Unauthorized reproduction, distribution, or dissemination, in whole or in part, is prohibited. The information contained herein is and remains the property of designSHOP and receipt or possession of this information confers no right in or license to disclose to others the subject matter contained herein for any but authorized purposes. All rights reserved. Copyright 2018.

DATE
07 . NOV . 2018
PHASE
REVIEW SET
DRAWING NUMBER
A1.3

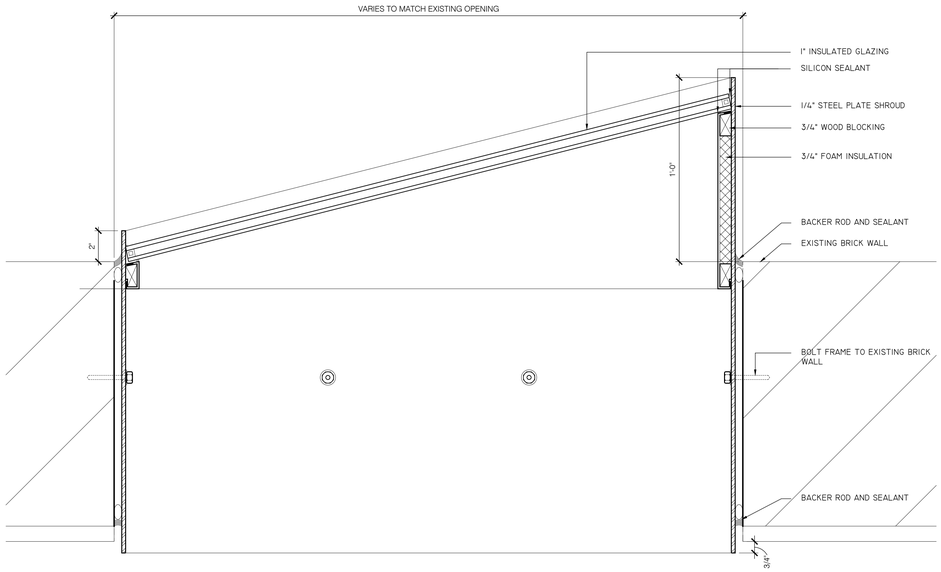

D1 Plan Details
SCALE: 3"=1'-0"

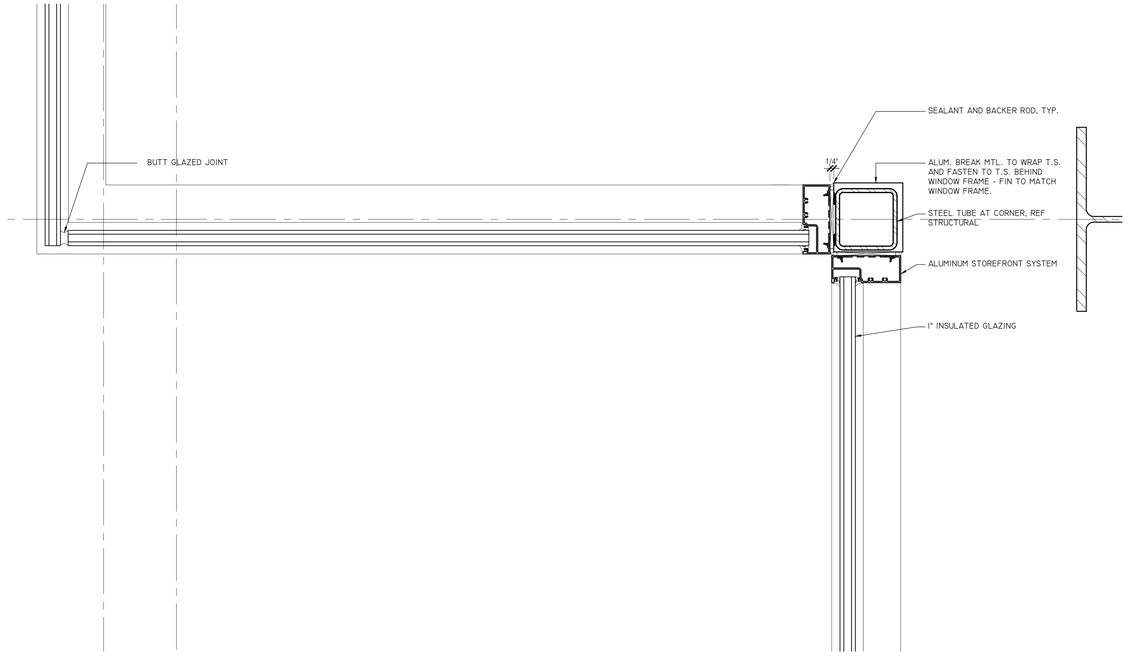

D4 Plan Details
SCALE: 3"=1'-0"

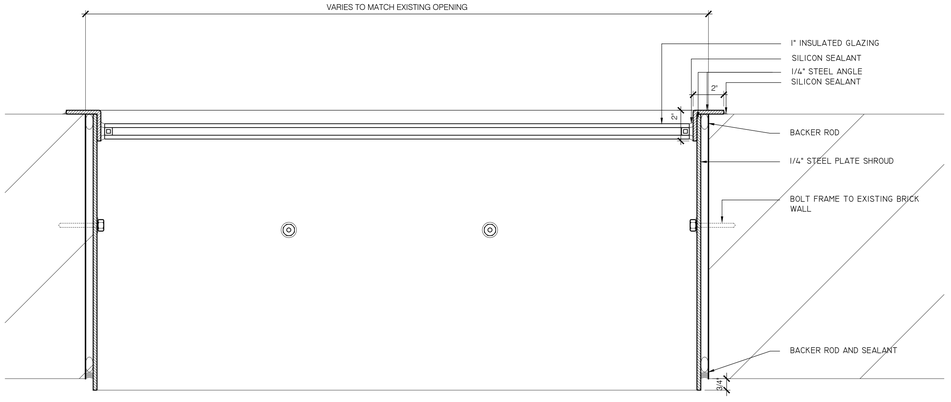

A1 Plan Details
SCALE: 3"=1'-0"

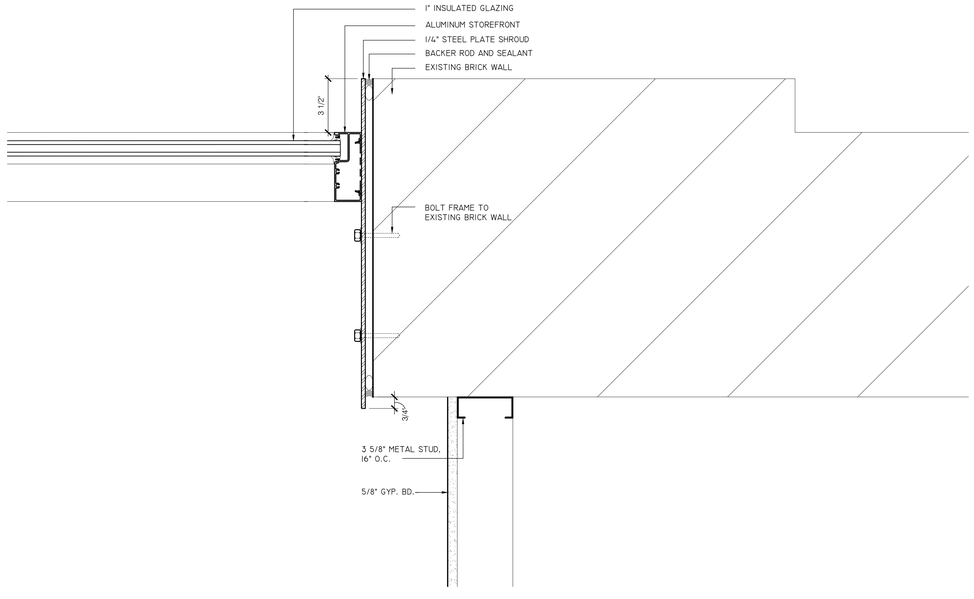

A4 Plan Details
SCALE: 3"=1'-0"

designshop
p.o. box 42203
memphis, tn 38174
901.303.8255

ARCHITECT OF RECORD SEAL:

NOT FOR CONSTRUCTION FOR REVIEW ONLY

JOB NUMBER

18016

REVISIONS
DATE DESCRIPTION

PROJECT TITLE

18 S. Main

SHELL

18 S. Main St.
Memphis, TN 38103

DRAWING NAME

Plan Details

This drawing has been prepared under the architect's supervision. The architect disclaims any responsibility for the existing building structure, existing site conditions, existing construction elements, and any drawings or documents used for this project that are not signed and sealed by the architect.

This information herein is of proprietary nature and is submitted in confidence for the use of our clients only. Unauthorized reproduction, distribution, or dissemination, in whole or in part, is prohibited. The information contained herein is and remains the property of designSHOP and receipt or possession of this information confers no right in or license to disclose to others the subject matter contained herein for any but authorized purposes. All rights reserved. Copyright 2018.

DATE

07 . NOV . 2018

PHASE

REVIEW SET

DRAWING NUMBER

A2.0

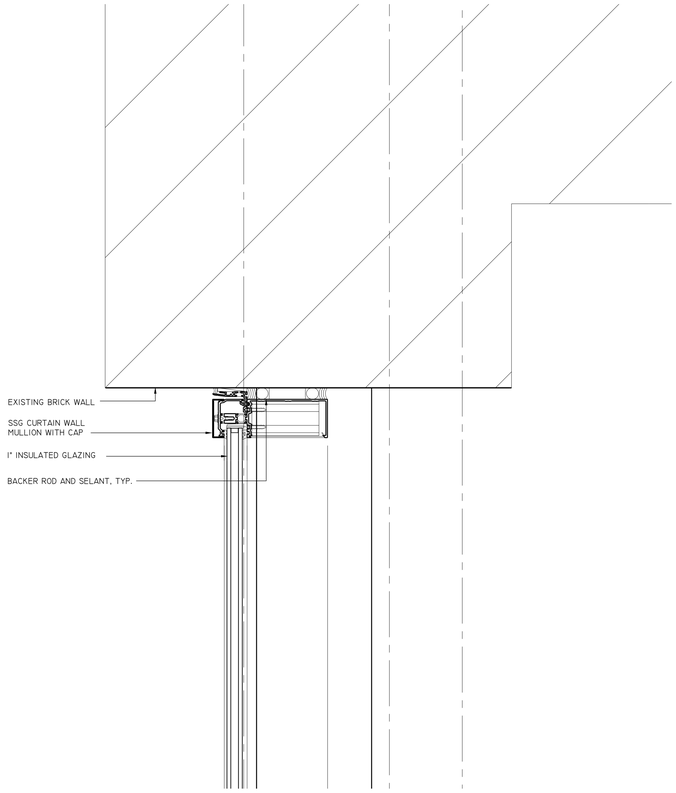

C1 Enlarged Plan
SCALE: 1/2"=1'-0"

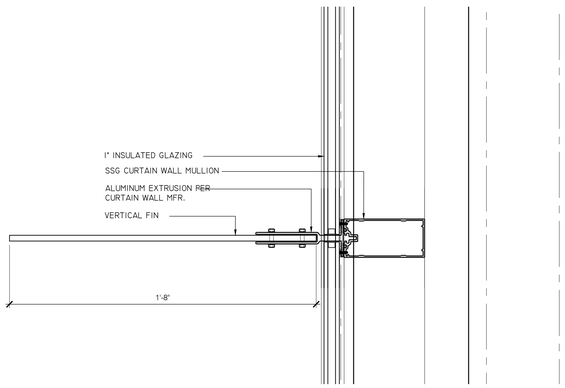

B1 Enlarged Plan
SCALE: 1/2"=1'-0"

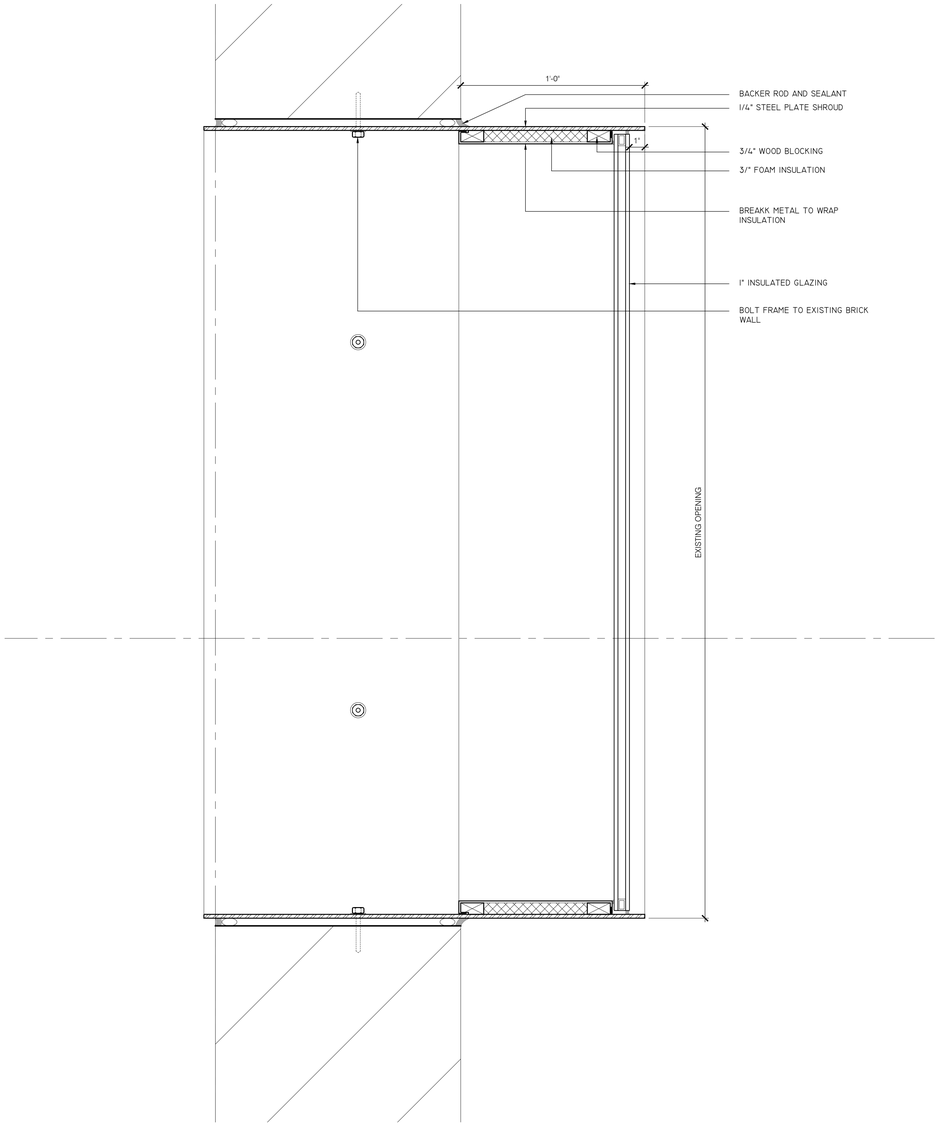

B5 Enlarged Plan
SCALE: 1/2"=1'-0"

designshop
p.o. box 42203
memphis, tn 38174
901.303.8255

ARCHITECT OF RECORD SEAL:

NOT FOR CONSTRUCTION FOR REVIEW ONLY

JOB NUMBER
18016

REVISIONS
DATE DESCRIPTION

PROJECT TITLE
18 S. Main

SHELL

18 S. Main St.
Memphis, TN 38103

DRAWING NAME
Plan Details

This drawing has been prepared under the architect's supervision. The architect disclaims any responsibility for the existing building structure, existing site conditions, existing construction elements, and any drawings or documents used for this project that are not signed and sealed by the architect.

This information herein is of proprietary nature and is submitted in confidence for the use of our clients only. Unauthorized reproduction, distribution, or dissemination, in whole or in part, is prohibited. The information contained herein is and remains the property of designSHOP and receipt or possession of this information confers no right in or license to disclose to others the subject matter contained herein for any but authorized purposes. All rights reserved. Copyright 2018.

DATE
07 . NOV . 2018
PHASE
REVIEW SET
DRAWING NUMBER
A2.1

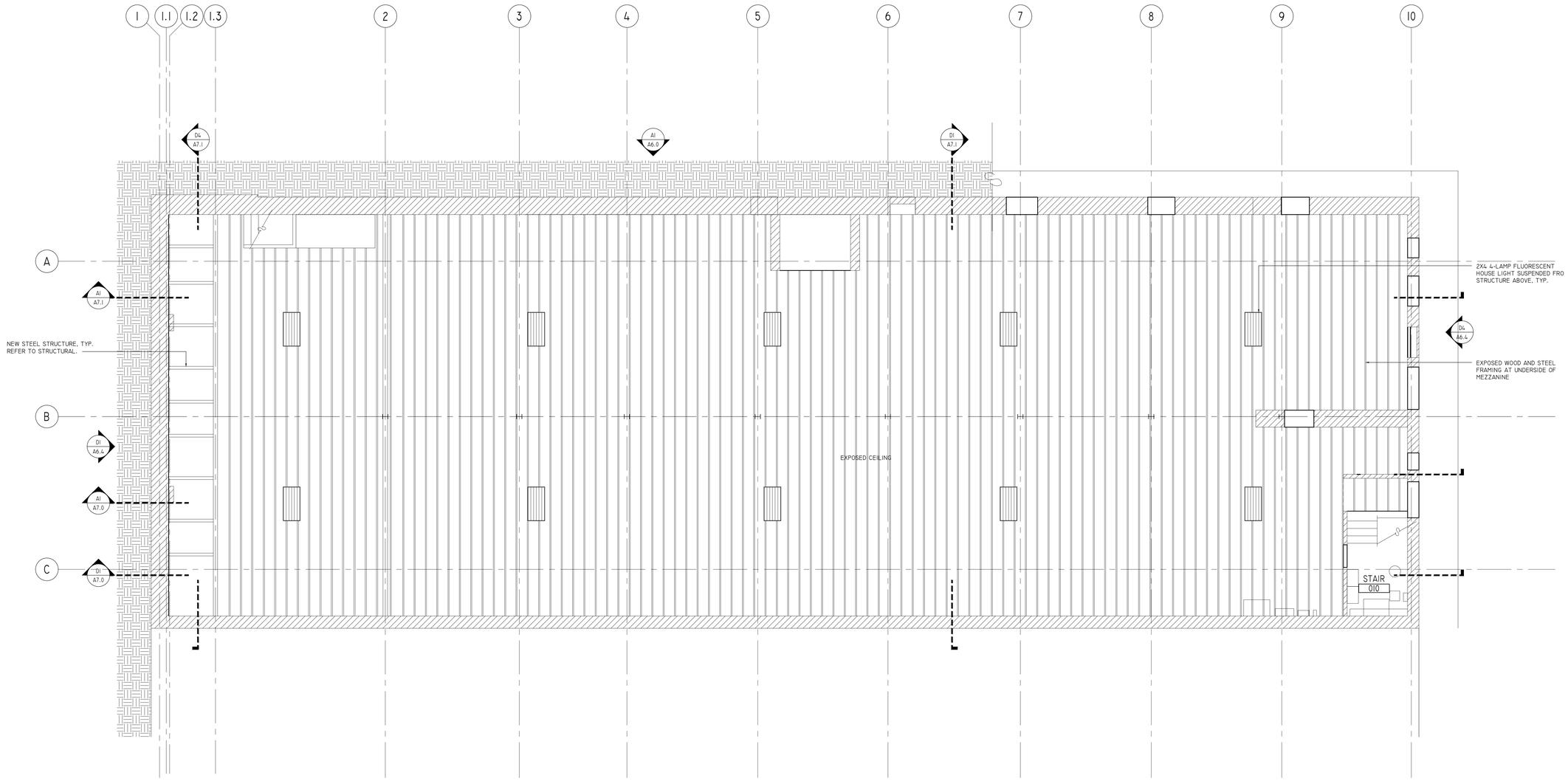

A1 First Floor Plan
SCALE: 3/16"=1'-0"

designshop
p.o. box 42203
memphis, tn 38174
901.303.8255

ARCHITECT OF RECORD SEAL:

NOT FOR CONSTRUCTION FOR REVIEW ONLY

JOB NUMBER
18016

REVISIONS
DATE DESCRIPTION

PROJECT TITLE
18 S. Main

SHELL

18 S. Main St.
Memphis, TN 38103

DRAWING NAME
Basement
Reflected Ceiling Plan

This drawing has been prepared under the architect's supervision. The architect disclaims any responsibility for the existing building structure, existing site conditions, existing construction elements, and any drawings or documents used for this project that are not signed and sealed by the architect.

This information herein is of proprietary nature and is submitted in confidence for the use of our clients only. Unauthorized reproduction, distribution, or dissemination, in whole or in part, is prohibited. The information contained herein is and remains the property of designSHOP and receipt or possession of this information confers no right in or license to disclose to others the subject matter contained herein for any but authorized purposes. All rights reserved. Copyright 2018.

DATE
07 . NOV . 2018
PHASE
REVIEW SET
DRAWING NUMBER
A3.0

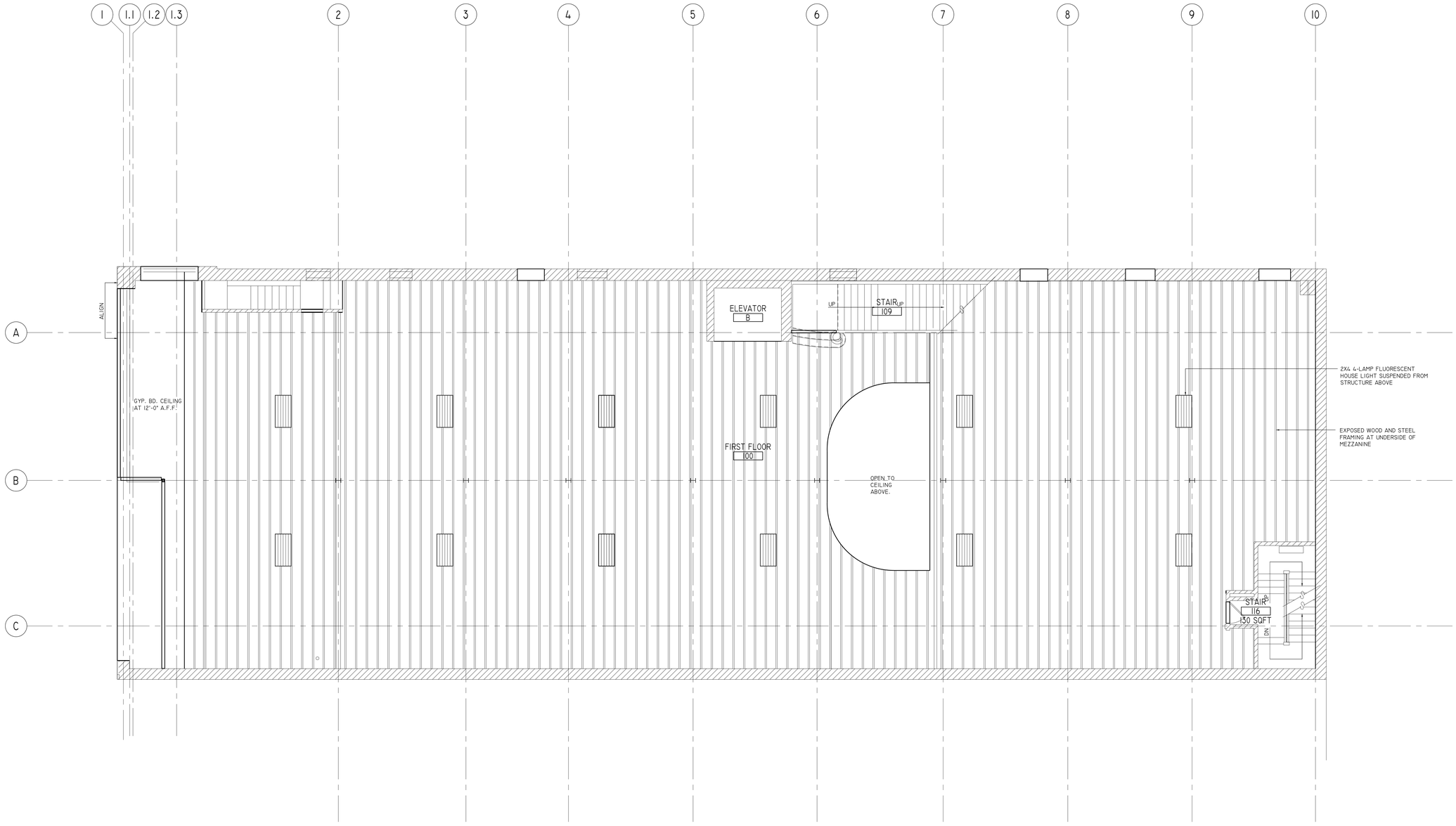

A1 First Floor RCP
SCALE: 3/16"=1'-0"

designshop
p.o. box 42203
memphis, tn 38174
901.303.8255

ARCHITECT OF RECORD SEAL:

NOT FOR CONSTRUCTION FOR REVIEW ONLY

JOB NUMBER
18016

REVISIONS
DATE DESCRIPTION

PROJECT TITLE
18 S. Main

SHELL

18 S. Main St.
Memphis, TN 38103

DRAWING NAME
First Floor
Reflected Ceiling Plan

This drawing has been prepared under the architect's supervision. The architect disclaims any responsibility for the existing building structure, existing site conditions, existing construction elements, and any drawings or documents used for this project that are not signed and sealed by the architect.

This information herein is of proprietary nature and is submitted in confidence for the use of our clients only. Unauthorized reproduction, distribution, or dissemination, in whole or in part, is prohibited. The information contained herein is and remains the property of designSHOP and receipt or possession of this information confers no right in or license to disclose to others the subject matter contained herein for any but authorized purposes. All rights reserved. Copyright 2018.

DATE
07 . NOV . 2018
PHASE
REVIEW SET
DRAWING NUMBER
A3.1

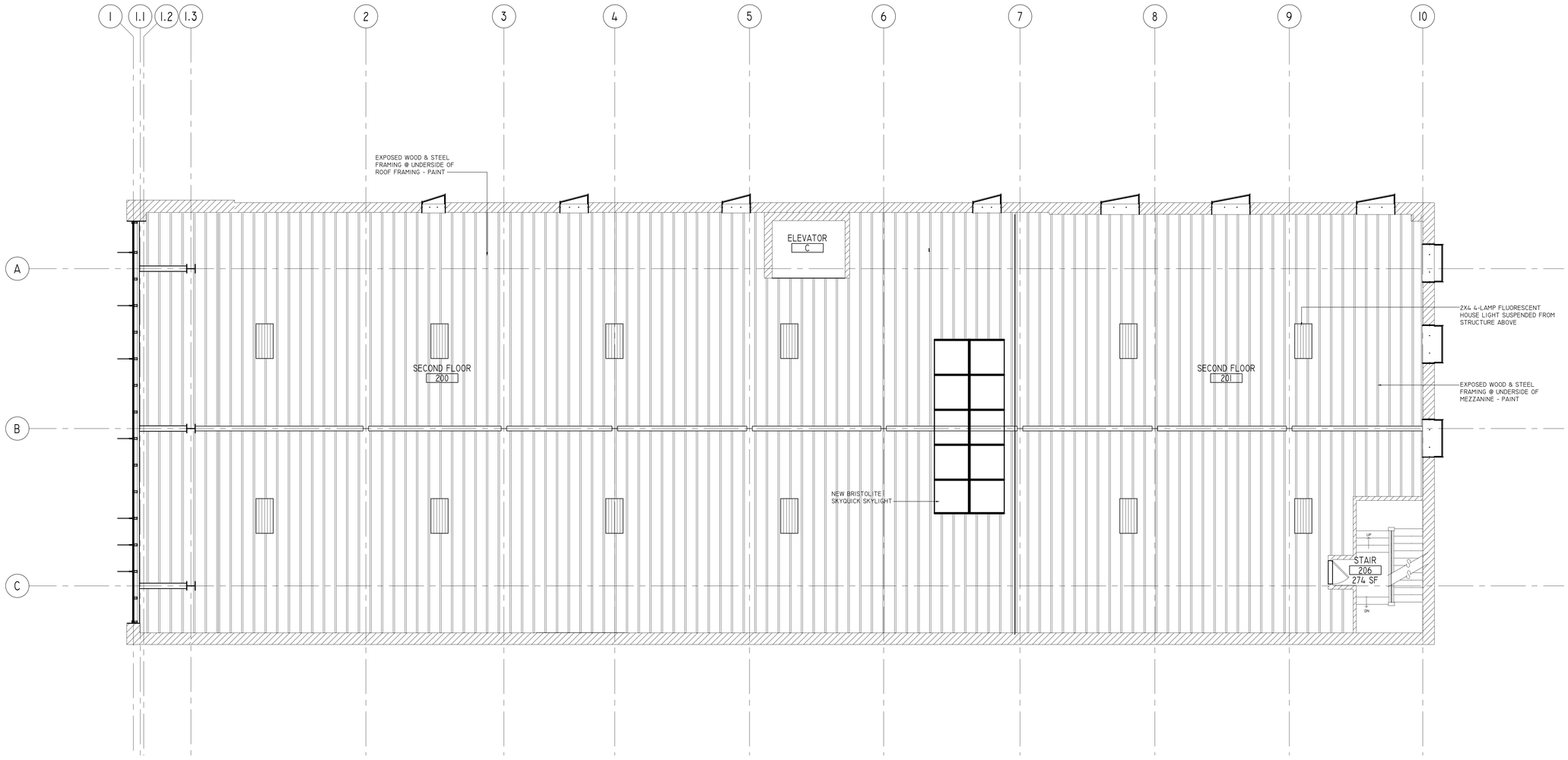

A1 Second Floor Reflected Ceiling Plan

SCALE: 3/16"=1'-0"

designshop
p.o. box 42203
memphis, tn 38174
901.303.8255

ARCHITECT OF RECORD SEAL:

NOT FOR CONSTRUCTION FOR REVIEW ONLY

JOB NUMBER

18016

REVISIONS

DATE	DESCRIPTION

PROJECT TITLE

18 S. Main

SHELL

18 S. Main St.
Memphis, TN 38103

DRAWING NAME

Second Floor Reflected Ceiling Plan

This drawing has been prepared under the architect's supervision. The architect disclaims any responsibility for the existing building structure, existing site conditions, existing construction elements, and any drawings or documents used for this project that are not signed and sealed by the architect.

This information herein is of proprietary nature and is submitted in confidence for the use of our clients only. Unauthorized reproduction, distribution, or dissemination, in whole or in part, is prohibited. The information contained herein is and remains the property of designSHOP and receipt or possession of this information confers no right in or license to disclose to others the subject matter contained herein for any but authorized purposes. All rights reserved. Copyright 2018.

DATE

07 . NOV . 2018

PHASE

REVIEW SET

DRAWING NUMBER

A3.2

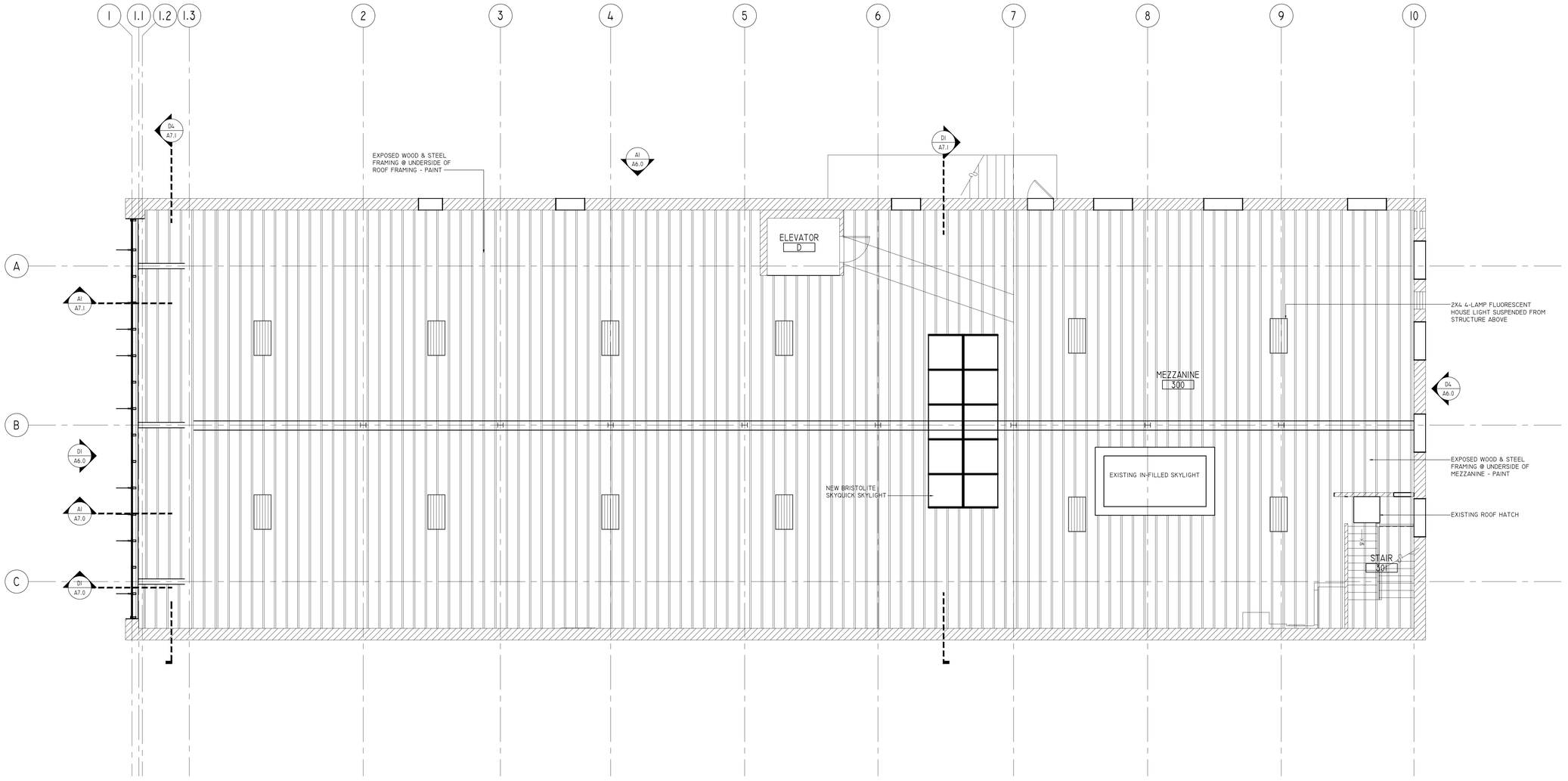

A1 Mezzanine Plan
SCALE: 3/16"=1'-0"

designshop
p.o. box 42203
memphis, tn 38174
901.303.8255

ARCHITECT OF RECORD SEAL:

NOT FOR CONSTRUCTION FOR REVIEW ONLY

JOB NUMBER

18016

REVISIONS
DATE DESCRIPTION

PROJECT TITLE

18 S. Main

SHELL

18 S. Main St.
Memphis, TN 38103

DRAWING NAME

Mezzanine
Reflected Ceiling Plan

This drawing has been prepared under the architect's supervision. The architect disclaims any responsibility for the existing building structure, existing site conditions, existing construction elements, and any drawings or documents used for this project that are not signed and sealed by the architect.

This information herein is of proprietary nature and is submitted in confidence for the use of our clients only. Unauthorized reproduction, distribution, or dissemination, in whole or in part, is prohibited. The information contained herein is and remains the property of designSHOP and receipt or possession of this information confers no right in or license to disclose to others the subject matter contained herein for any but authorized purposes. All rights reserved. Copyright 2018.

DATE

07 . NOV . 2018
PHASE

REVIEW SET
DRAWING NUMBER

A3.3

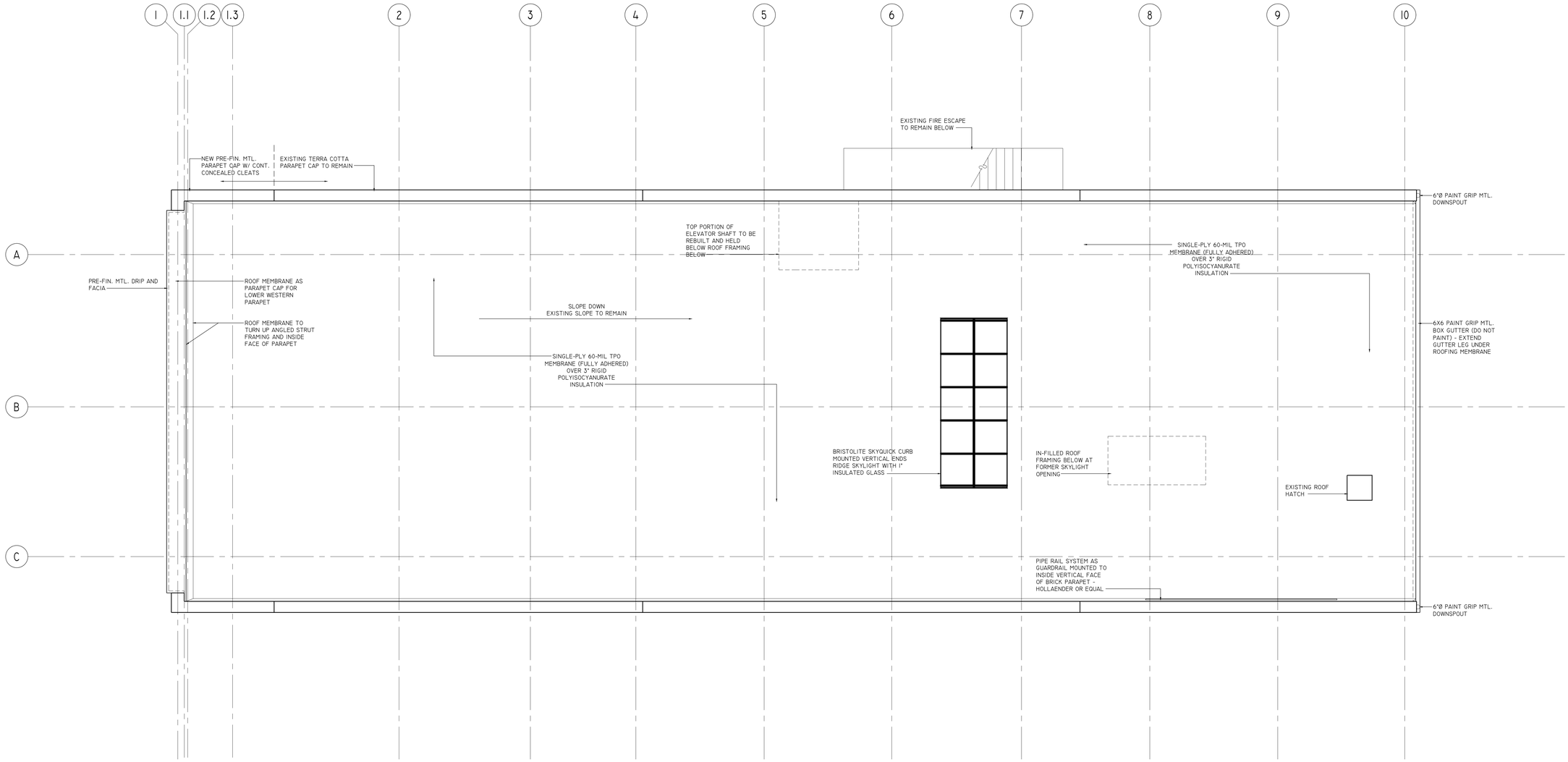

A1 Roof Plan
SCALE: 3/16"=1'-0"

designshop
p.o. box 42203
memphis, tn 38174
901.303.8255

ARCHITECT OF RECORD SEAL:

NOT FOR CONSTRUCTION FOR REVIEW ONLY

JOB NUMBER
18016

REVISIONS
DATE DESCRIPTION

PROJECT TITLE
18 S. Main

SHELL

18 S. Main St.
Memphis, TN 38103

DRAWING NAME
Roof Plan

This drawing has been prepared under the architect's supervision. The architect disclaims any responsibility for the existing building structure, existing site conditions, existing construction elements, and any drawings or documents used for this project that are not signed and sealed by the architect.

This information herein is of proprietary nature and is submitted in confidence for the use of our clients only. Unauthorized reproduction, distribution, or dissemination, in whole or in part, is prohibited. The information contained herein is and remains the property of designSHOP and receipt or possession of this information confers no right in or license to disclose to others the subject matter contained herein for any but authorized purposes. All rights reserved. Copyright 2018.

DATE
07 . NOV . 2018
PHASE
REVIEW SET
DRAWING NUMBER
A5.0

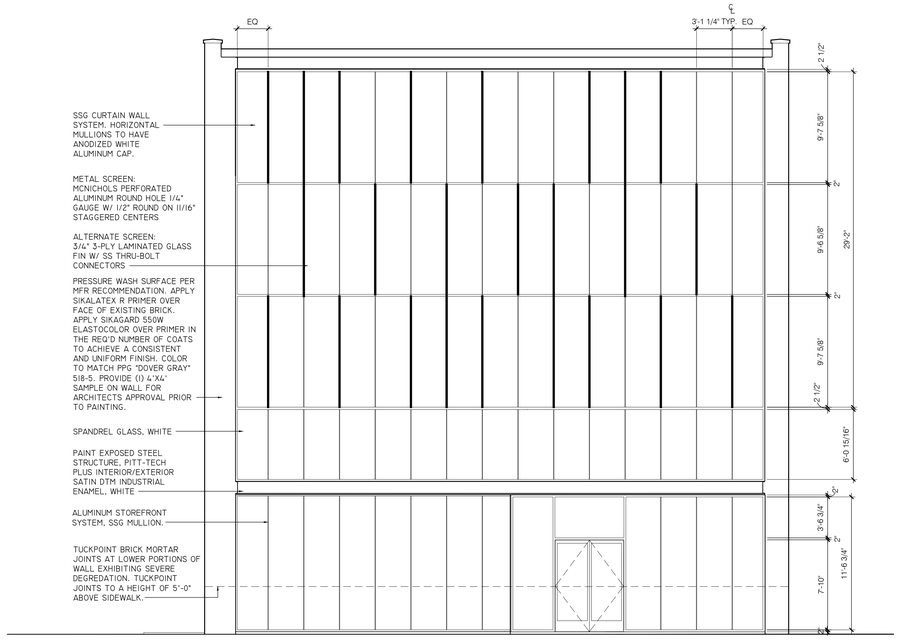

D1 West Elevation

SCALE: 3/16"=1'-0"

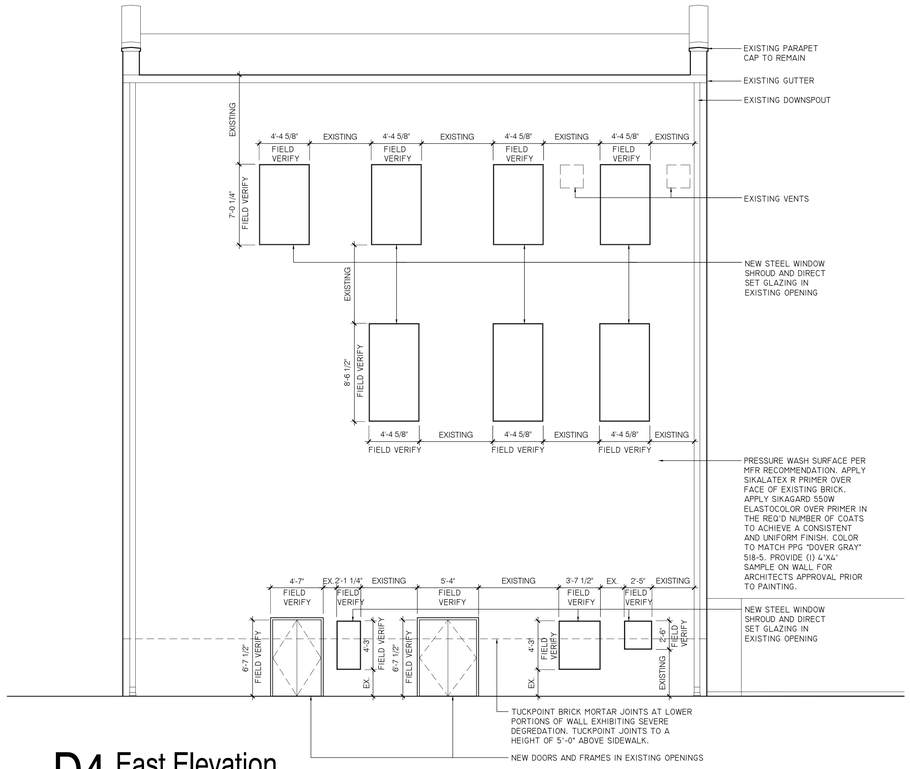

D4 East Elevation

SCALE: 3/16"=1'-0"

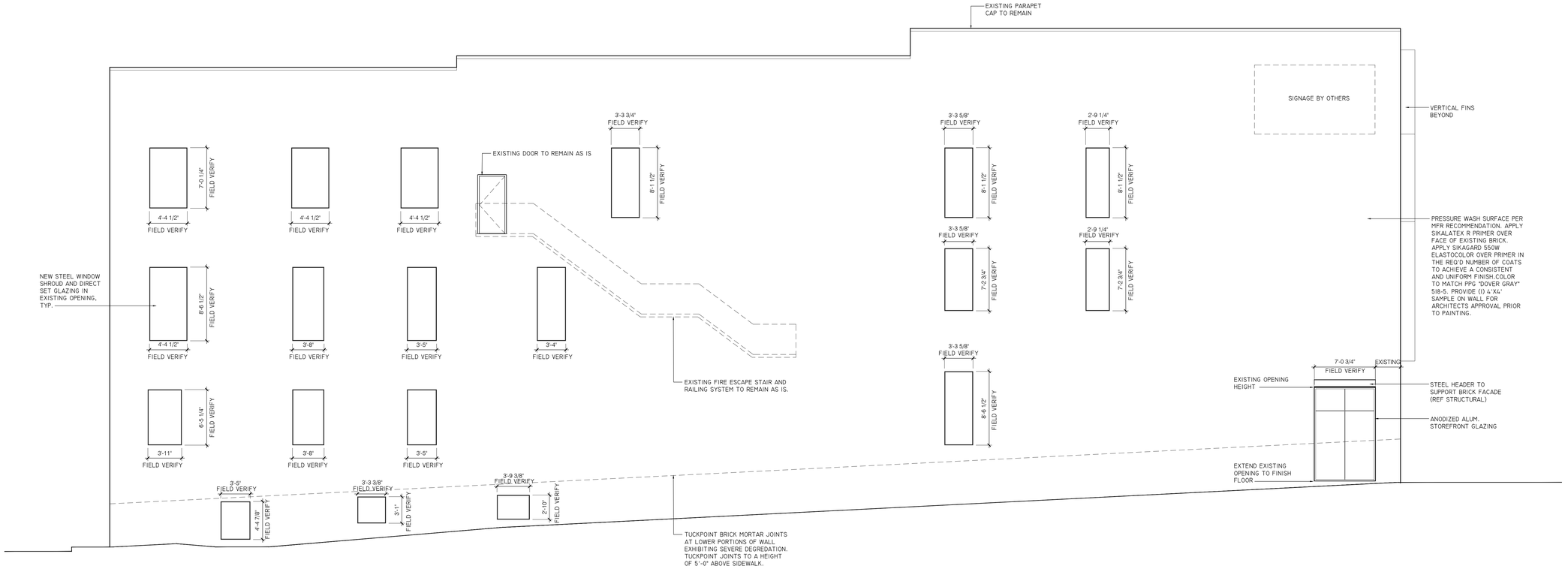

A1 North Elevation

SCALE: 3/16"=1'-0"

designshop
p.o. box 42203
memphis, tn 38174
901.303.8255

ARCHITECT OF RECORD SEAL:

NOT FOR CONSTRUCTION FOR REVIEW ONLY

JOB NUMBER

18016

REVISIONS
DATE DESCRIPTION

PROJECT TITLE

18 S. Main

SHELL

18 S. Main St.
Memphis, TN 38103

DRAWING NAME

Exterior Elevations

This drawing has been prepared under the architect's supervision. The architect disclaims any responsibility for the existing building structure, existing site conditions, existing construction elements, and any drawings or documents used for this project that are not signed and sealed by the architect.

This information herein is of proprietary nature and is submitted in confidence for the use of our clients only. Unauthorized reproduction, distribution, or dissemination, in whole or in part, is prohibited. The information contained herein is and remains the property of designSHOP and receipt or possession of this information confers no right in or license to disclose to others the subject matter contained herein for any but authorized purposes. All rights reserved. Copyright 2018.

DATE

07 . NOV . 2018

PHASE

REVIEW SET

DRAWING NUMBER

A6.0

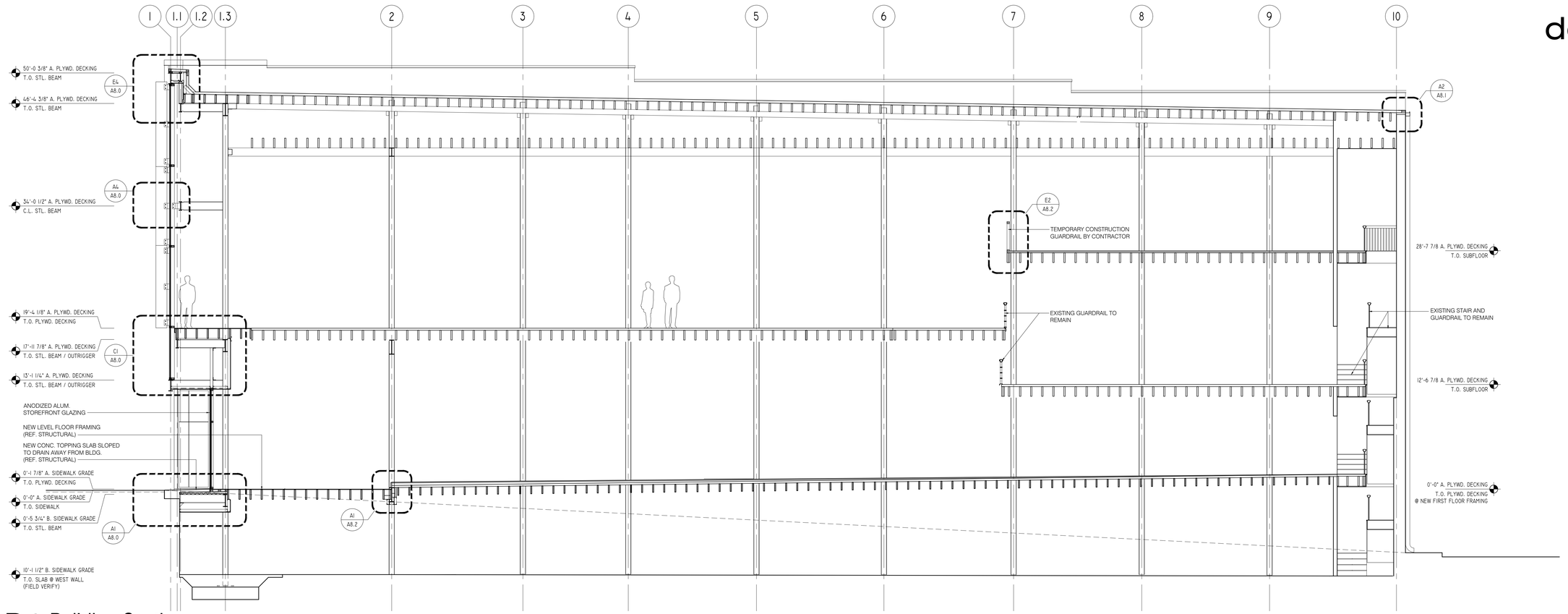

D1 Building Section

SCALE: 3/16"=1'-0"

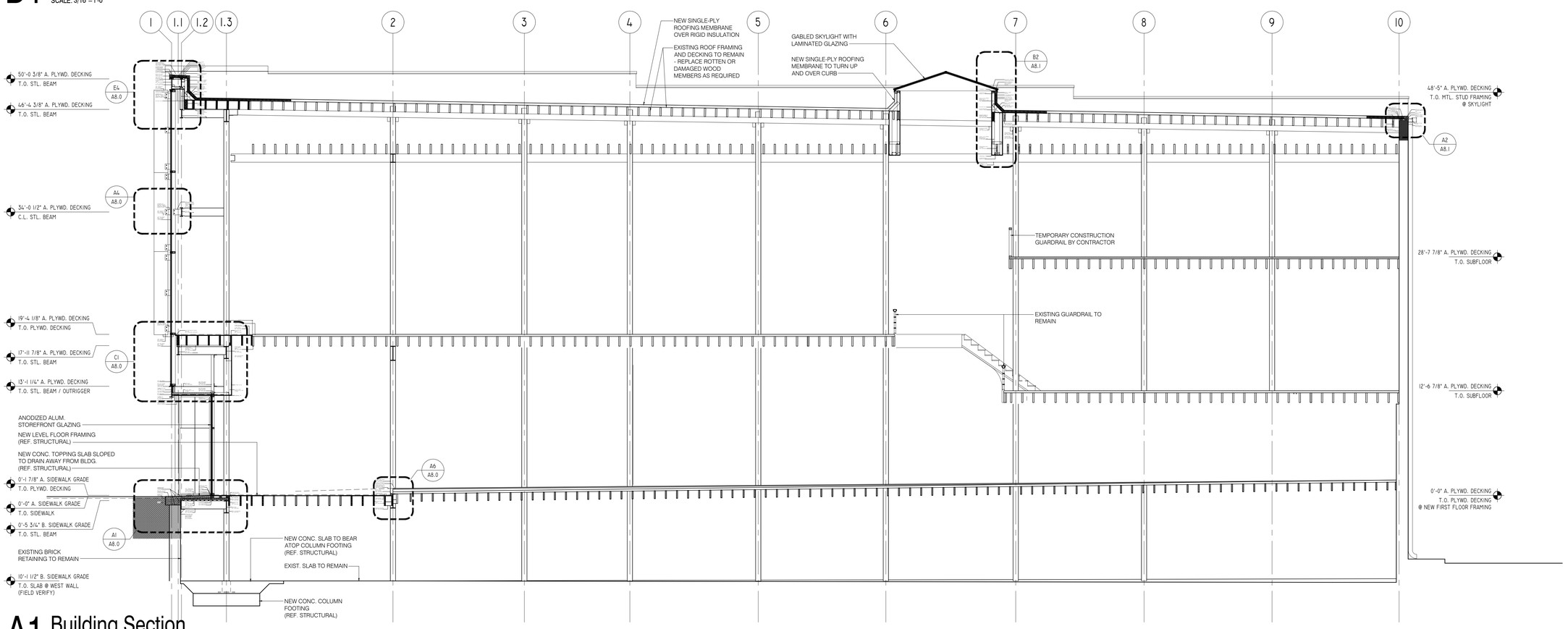

A1 Building Section

SCALE: 3/16"=1'-0"

designshop
p.o. box 42203
memphis, tn 38174
901.303.8255

ARCHITECT OF RECORD SEAL:

NOT FOR
CONSTRUCTION FOR
REVIEW ONLY

JOB NUMBER

18016

REVISIONS
DATE DESCRIPTION

PROJECT TITLE

18 S. Main

SHELL

18 S. Main St.
Memphis, TN 38103

DRAWING NAME

Building Section

This drawing has been prepared under the architect's supervision. The architect disclaims any responsibility for the existing building structure, existing site conditions, existing construction elements, and any drawings or documents used for this project that are not signed and sealed by the architect.

This information herein is of proprietary nature and is submitted in confidence for the use of our clients only. Unauthorized reproduction, distribution, or dissemination, in whole or in part, is prohibited. The information contained herein is and remains the property of designSHOP and receipt or possession of this information confers no right in or license to disclose to others the subject matter contained herein for any but authorized purposes. All rights reserved. Copyright 2018.

DATE

07 . NOV . 2018

PHASE

REVIEW SET

DRAWING NUMBER

A7.0

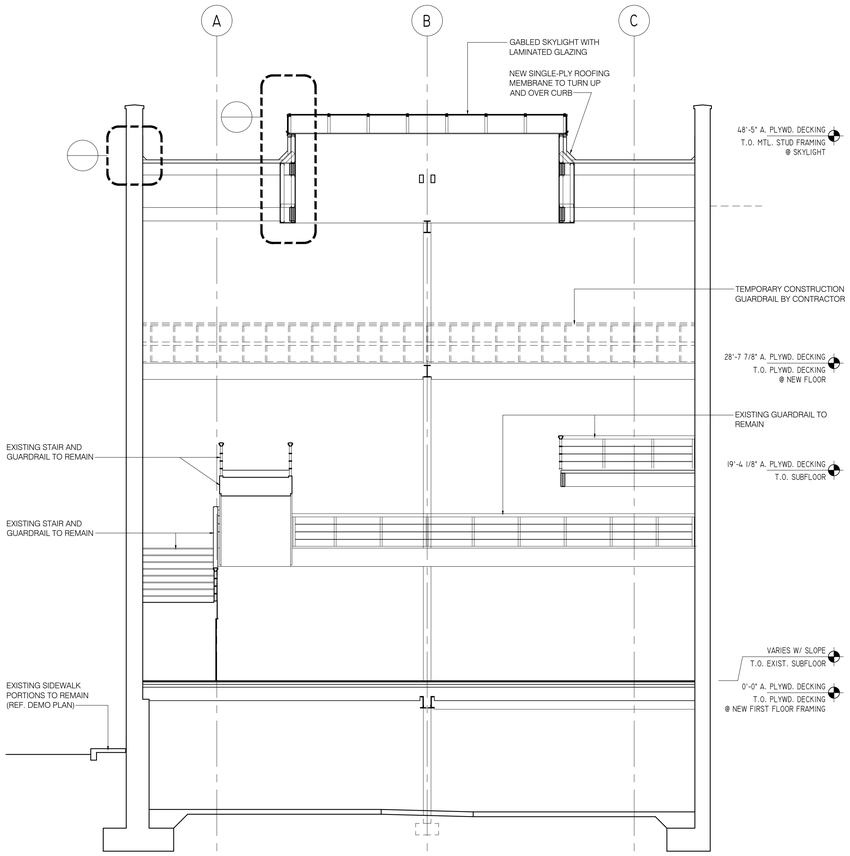

D1 Building Section

SCALE: 3/16"=1'-0"

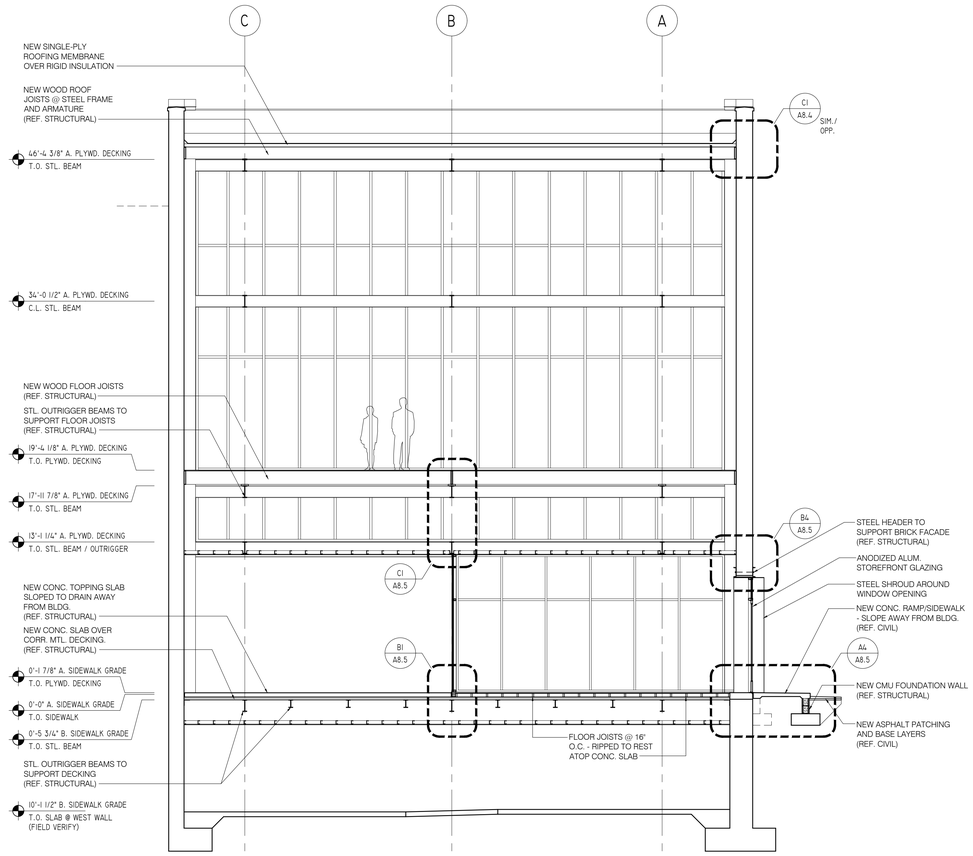

D4 Building Section

SCALE: 3/16"=1'-0"

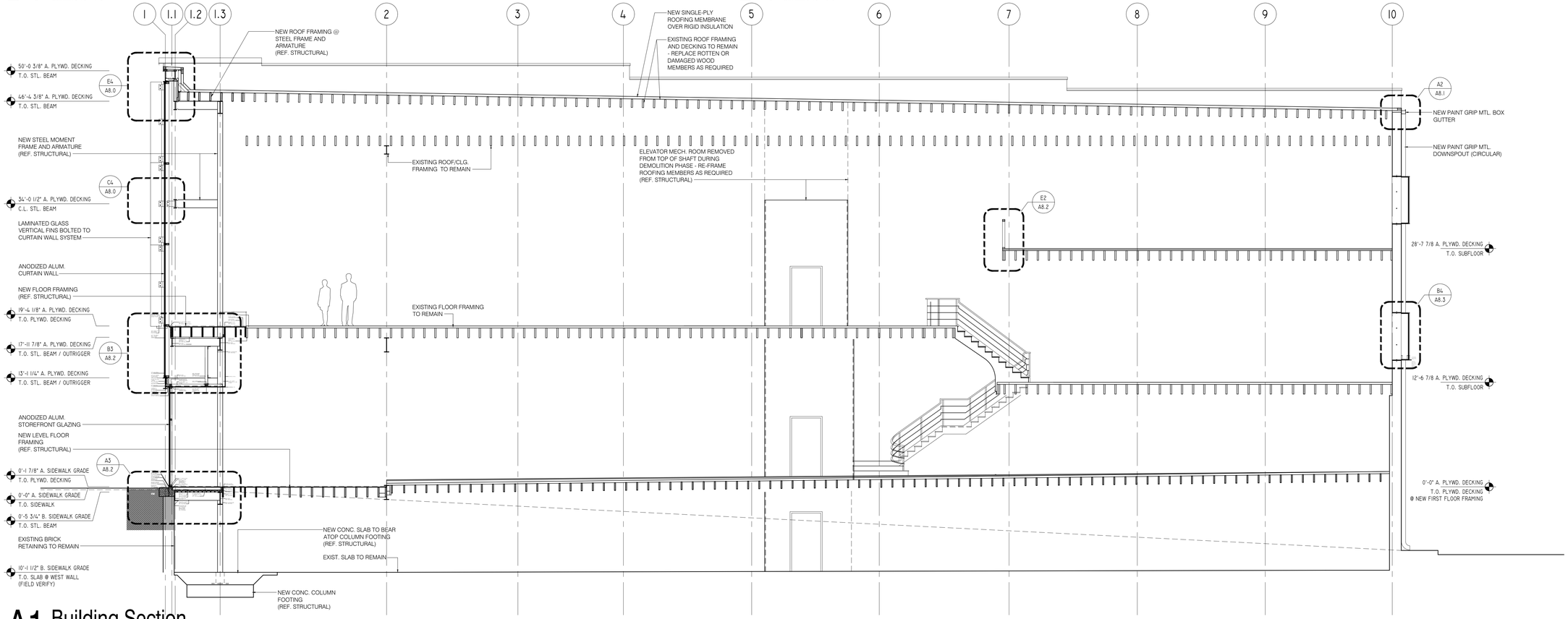

A1 Building Section

SCALE: 3/16"=1'-0"

designshop
p.o. box 42203
memphis, tn 38174
901.303.8255

ARCHITECT OF RECORD SEAL:

NOT FOR CONSTRUCTION FOR REVIEW ONLY

JOB NUMBER

18016

REVISIONS

DATE DESCRIPTION

PROJECT TITLE

18 S. Main

SHELL

18 S. Main St.
Memphis, TN 38103

DRAWING NAME

Building Section

This drawing has been prepared under the architect's supervision. The architect disclaims any responsibility for the existing building structure, existing site conditions, existing construction elements, and any drawings or documents used for this project that are not signed and sealed by the architect.

This information herein is of proprietary nature and is submitted in confidence for the use of our clients only. Unauthorized reproduction, distribution, or dissemination, in whole or in part, is prohibited. The information contained herein is and remains the property of designSHOP and receipt or possession of this information confers no right in or license to disclose to others the subject matter contained herein for any but authorized purposes. All rights reserved. Copyright 2018.

DATE

07 . NOV . 2018

PHASE

REVIEW SET

DRAWING NUMBER

A7.1

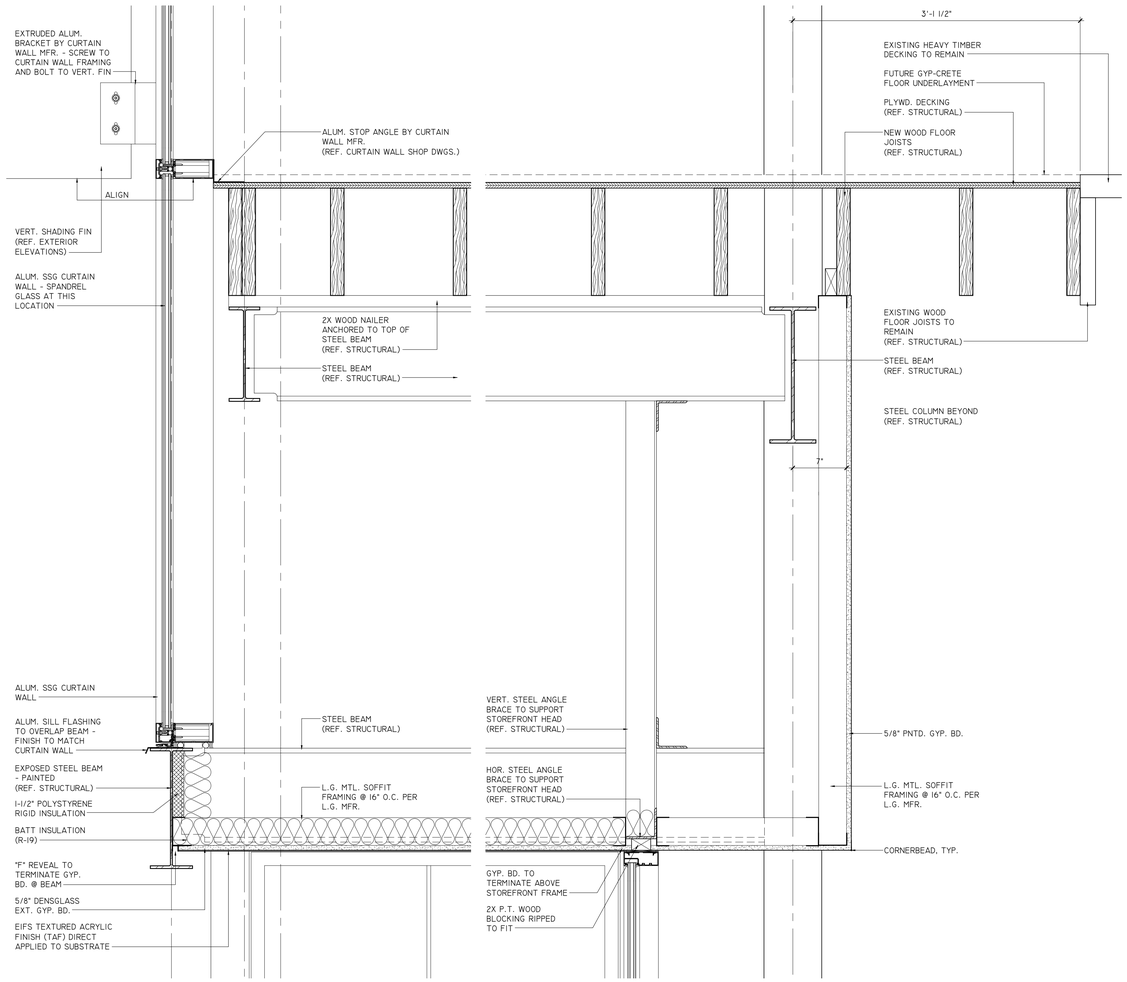

C1 Section Detail
SCALE: 1-1/2"=1'-0"

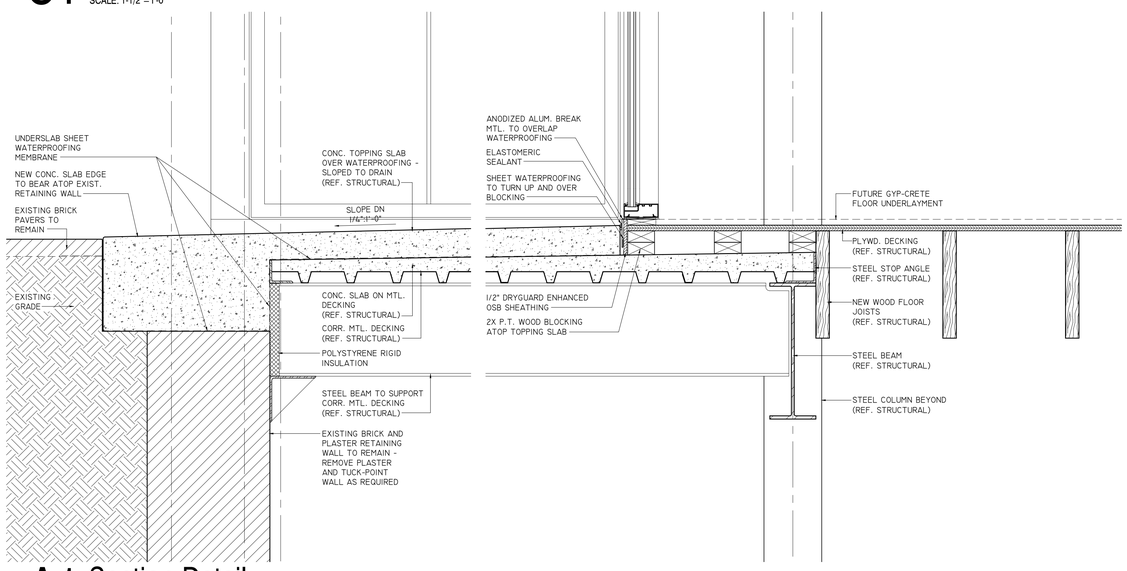

A1 Section Detail
SCALE: 1-1/2"=1'-0"

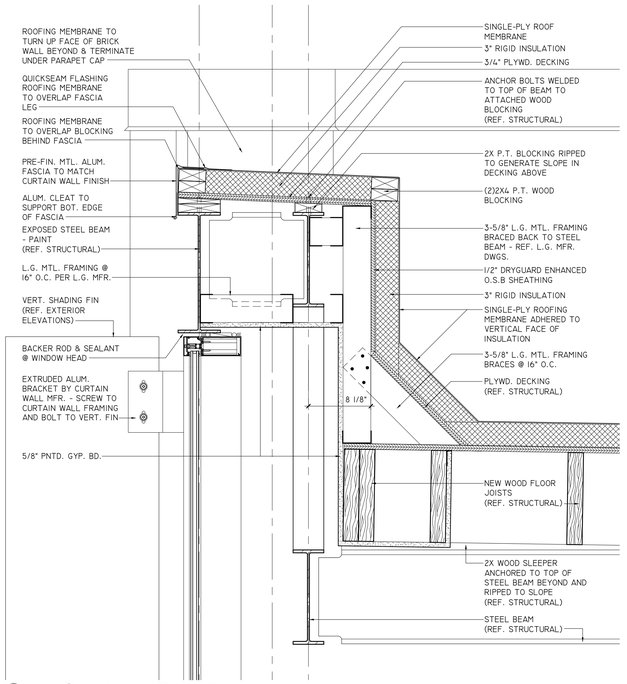

C4 Section Detail
SCALE: 1-1/2"=1'-0"

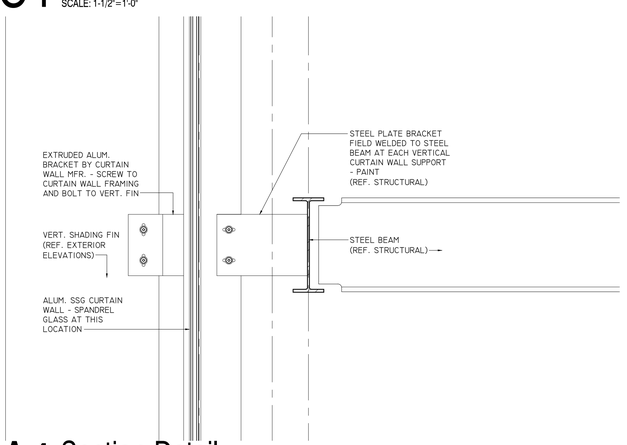

A4 Section Detail
SCALE: 1-1/2"=1'-0"

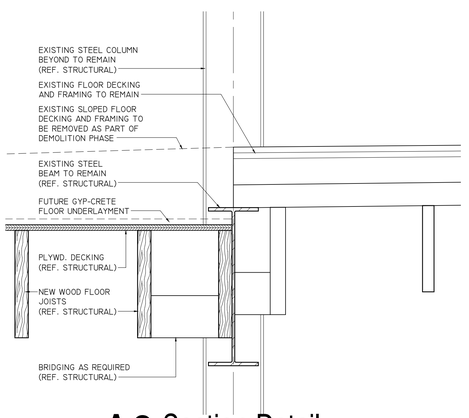

A6 Section Detail
SCALE: 1-1/2"=1'-0"

designshop
p.o. box 42203
memphis, tn 38174
901.303.8255

ARCHITECT OF RECORD SEAL:

NOT FOR CONSTRUCTION FOR REVIEW ONLY

JOB NUMBER
18016

REVISIONS
DATE DESCRIPTION

PROJECT TITLE
18 S. Main

SHELL

18 S. Main St.
Memphis, TN 38103

DRAWING NAME
Section Details

This drawing has been prepared under the architect's supervision. The architect disclaims any responsibility for the existing building structure, existing site conditions, existing construction elements, and any drawings or documents used for this project that are not signed and sealed by the architect.

This information herein is of proprietary nature and is submitted in confidence for the use of our clients only. Unauthorized reproduction, distribution, or dissemination, in whole or in part, is prohibited. The information contained herein is and remains the property of designSHOP and receipt or possession of this information confers no right in or license to disclose to others the subject matter contained herein for any but authorized purposes. All rights reserved. Copyright 2018.

DATE
07 . NOV . 2018
PHASE
REVIEW SET
DRAWING NUMBER
A8.0

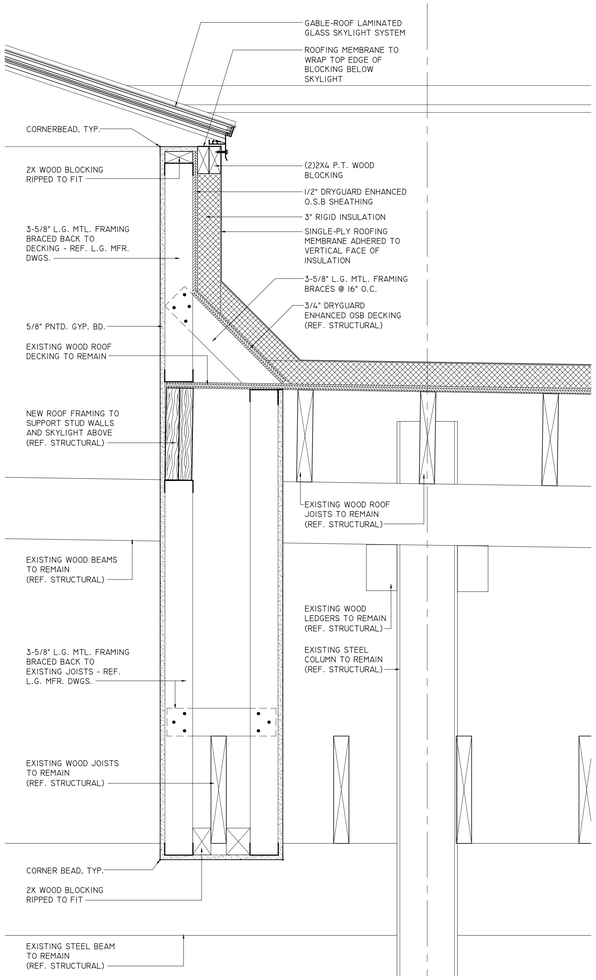

B1 Section Detail

SCALE: 1-1/2"=1'-0"

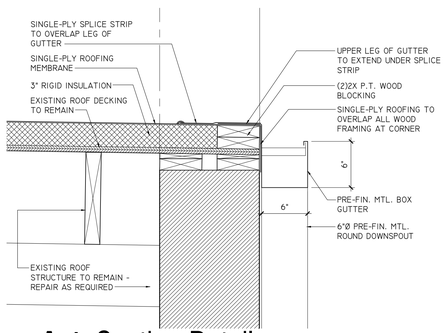

A1 Section Detail

SCALE: 1-1/2"=1'-0"

designshop
p.o. box 42203
memphis, tn 38174
901.303.8255

ARCHITECT OF RECORD SEAL:

NOT FOR CONSTRUCTION FOR REVIEW ONLY

JOB NUMBER

18016

REVISIONS
DATE DESCRIPTION

PROJECT TITLE

18 S. Main

SHELL

18 S. Main St.
Memphis, TN 38103

DRAWING NAME

Section Details

This drawing has been prepared under the architect's supervision. The architect disclaims any responsibility for the existing building structure, existing site conditions, existing construction elements, and any drawings or documents used for this project that are not signed and sealed by the architect.

This information herein is of proprietary nature and is submitted in confidence for the use of our clients only. Unauthorized reproduction, distribution, or dissemination, in whole or in part, is prohibited. The information contained herein is and remains the property of designSHOP and receipt or possession of this information confers no right in or license to disclose to others the subject matter contained herein for any but authorized purposes. All rights reserved. Copyright 2018.

DATE

07 . NOV . 2018

PHASE

REVIEW SET

DRAWING NUMBER

A8.1

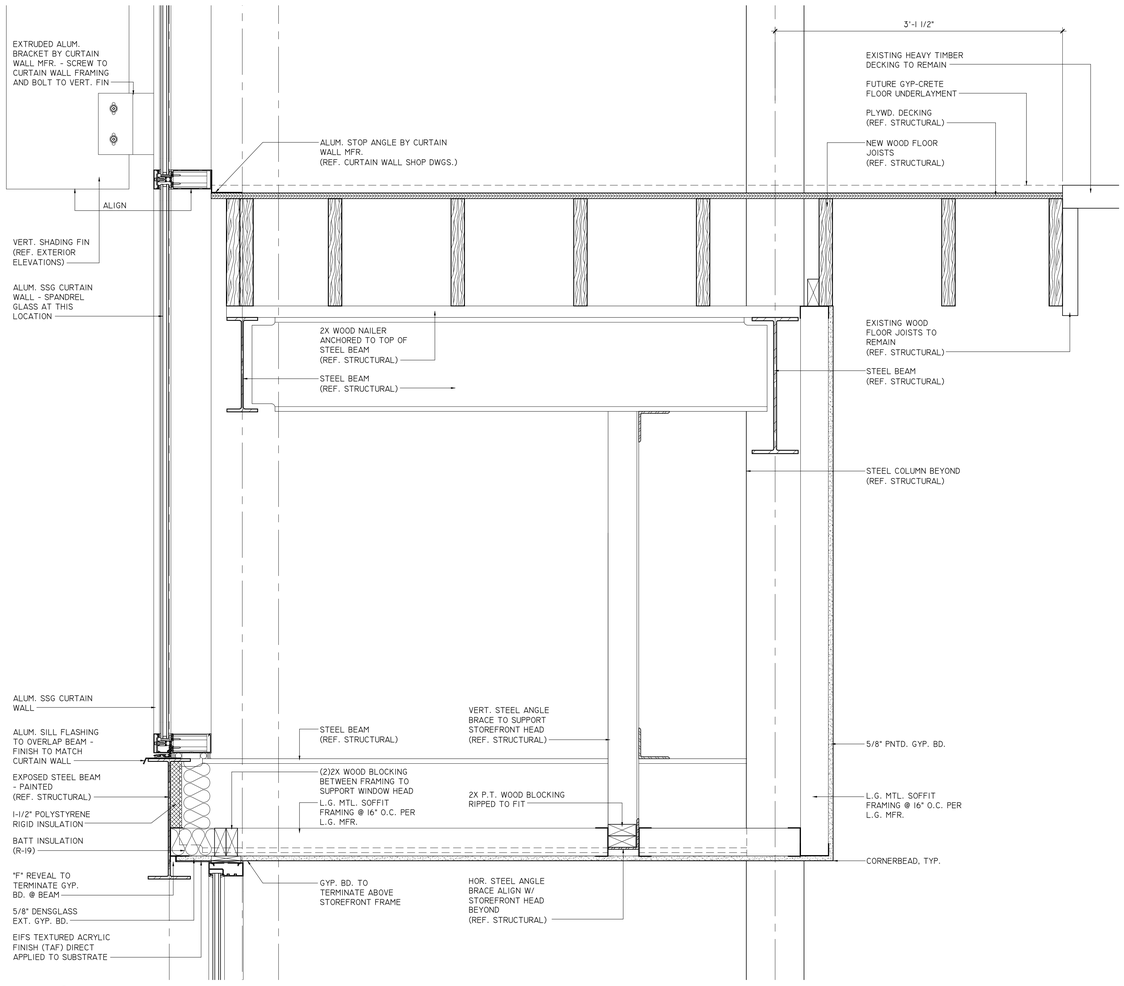

B1 Section Detail

SCALE: 1-1/2"=1'-0"

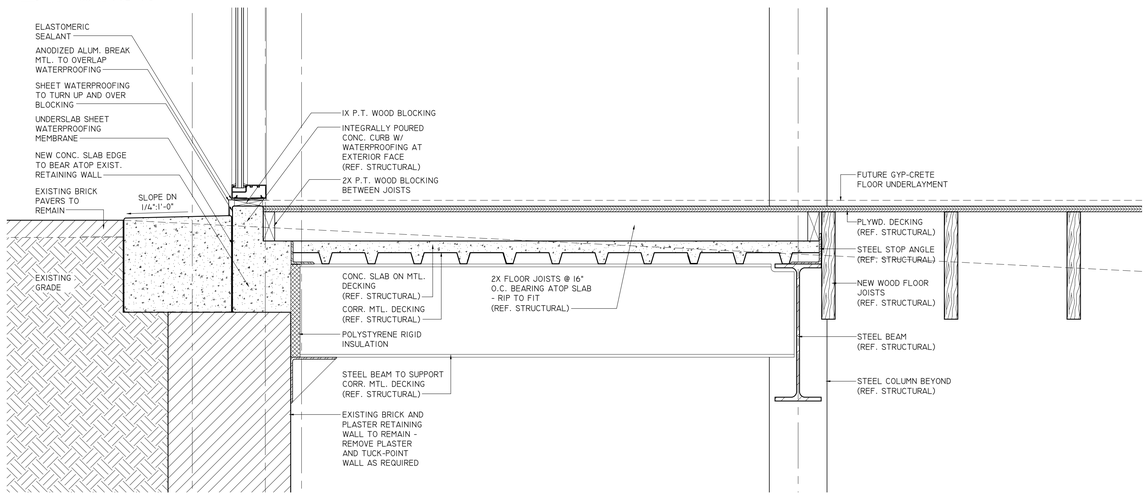

A1 Section Detail

SCALE: 1-1/2"=1'-0"

designshop
p.o. box 42203
memphis, tn 38174
901.303.8255

ARCHITECT OF RECORD SEAL:

NOT FOR CONSTRUCTION FOR REVIEW ONLY

JOB NUMBER

18016

REVISIONS

DATE	DESCRIPTION

PROJECT TITLE

18 S. Main

SHELL

18 S. Main St.
Memphis, TN 38103

DRAWING NAME

Section Details

This drawing has been prepared under the architects supervision. The architect disclaims any responsibility for the existing building structure, existing site conditions, existing construction elements, and any drawings or documents used for this project that are not signed and sealed by the architect.

This information herein is of proprietary nature and is submitted in confidence for the use of our clients only. Unauthorized reproduction, distribution, or dissemination, in whole or in part, is prohibited. The information contained herein is and remains the property of designSHOP and receipt or possession of this information confers no right in or license to disclose to others the subject matter contained herein for any but authorized purposes. All rights reserved. Copyright 2018.

DATE

07 . NOV . 2018

PHASE

REVIEW SET

DRAWING NUMBER

A8.2

Door Schedule

MARK	FROM ROOM	ROOM NO.	TO ROOM	ROOM NO.	WIDTH	HEIGHT	THICKNESS	MATERIAL	FINISH	TYPE	GLAZING	LABEL	FRAME TYPE	FRAME MATERIAL	FRAME FINISH	HEAD	JAMB	THRESH.	HDW SET NO.	REMARKS
BASEMENT																				
001	EXTERIOR		STAIR	010	(2) 2'-1 1/2"±	7'-0"±	1 3/4"	SOLID WOOD	PAINTED	B				HOLLOW METAL	PAINTED			1/2" HT. MAX.	5	FIELD VERIFY DIMENSIONS OF EXISTING OPENING PRIOR TO ORDERING DOORS
002	EXTERIOR		LOADING DOCK	012	(2) 2'-6"±	7'-0"±	1 3/4"	SOLID WOOD	PAINTED	B				HOLLOW METAL	PAINTED			1/2" HT. MAX.		FIELD VERIFY DIMENSIONS OF EXISTING OPENING PRIOR TO ORDERING DOORS
FIRST FLOOR																				
100	EXTERIOR		FIRST FLOOR	100	(2) 3'-0"	9'-0"	PER MFR.	ALUMINUM AND GLASS	CLEAR ANODIZED	A				ALUMINUM	CLEAR ANODIZED			1/2" HT. MAX.		
101	FIRST FLOOR	110	STAIR	116	3'-0"	7'-0"	1 3/4"	SOLID WOOD	PAINTED	B				HOLLOW METAL	PAINTED					
SECOND FLOOR																				
201	SECOND FLOOR	203	STAIR	206	3'-0"	7'-0"	1 3/4"	SOLID WOOD	PAINTED	B				HOLLOW METAL	PAINTED					

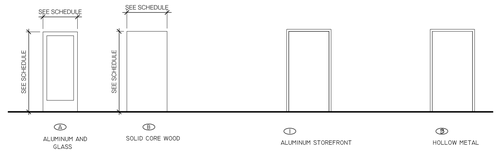

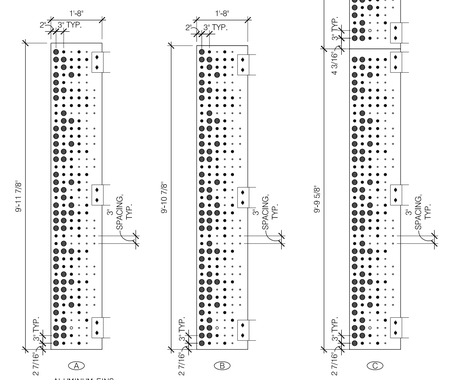

ALUMINUM FINS
3/8" THICK POWDER COATED ALUMINUM
COLOR TO BE SELECTED BY ARCHITECT

- 2" DIA. PERFORATIONS
- 1" DIA. PERFORATIONS
- 3/4" DIA. PERFORATIONS

ALTERNATE:
ALL FINS TO BE 3/4" 3-PLY LAMINATED GLASS FIN

D1 DOOR SCHEDULE
SCALE: -

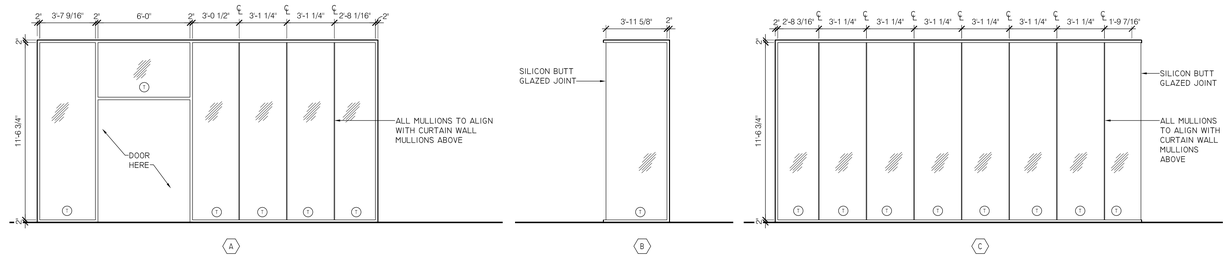

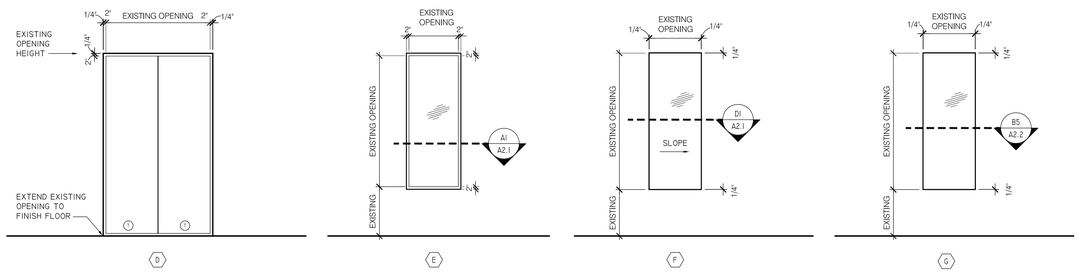

A1 DOOR SCHEDULE
SCALE: -

D6 FIN ELEVATIONS
SCALE: 1/2"=1'-0"

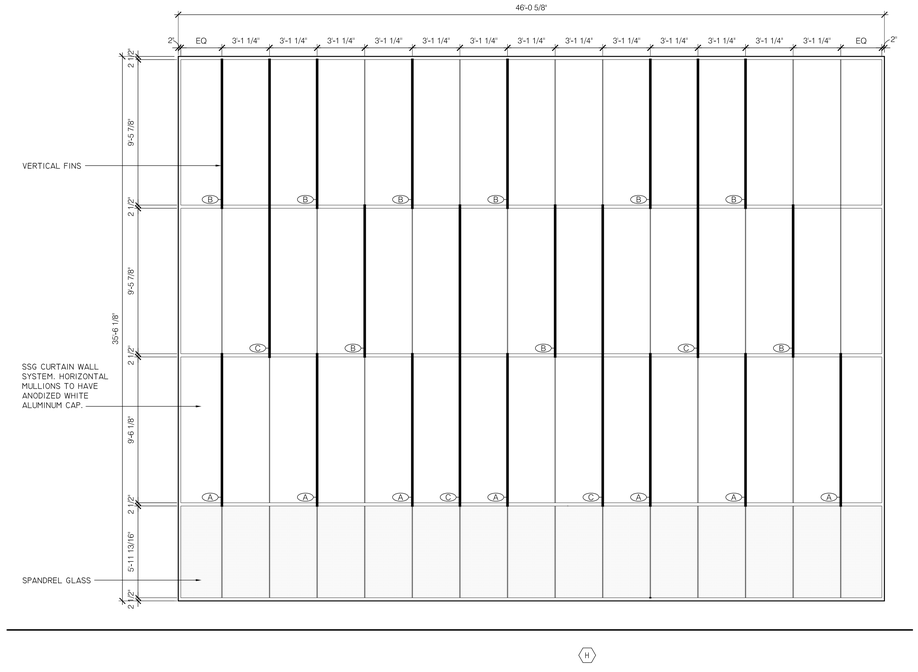

designshop
p.o. box 42203
memphis, tn 38174
901.303.8255

ARCHITECT OF RECORD SEAL:

NOT FOR CONSTRUCTION FOR REVIEW ONLY

JOB NUMBER
18016

REVISIONS
DATE DESCRIPTION

PROJECT TITLE
18 S. Main

SHELL

18 S. Main St.
Memphis, TN 38103

DRAWING NAME
DOOR SCHEDULE

This drawing has been prepared under the architect's supervision. The architect disclaims any responsibility for the existing building structure, existing site conditions, existing construction elements, and any drawings or documents used for this project that are not signed and sealed by the architect.

This information herein is of proprietary nature and is submitted in confidence for the use of our clients only. Unauthorized reproduction, distribution, or dissemination, in whole or in part, is prohibited. The information contained herein is and remains the property of designSHOP and receipt or possession of this information confers no right in or license to disclose to others the subject matter contained herein for any but authorized purposes. All rights reserved. Copyright 2018.

DATE
07 . NOV . 2018
PHASE
REVIEW SET
DRAWING NUMBER
A12.0

CRL BLUMCRAFT SERIES 1301 ENTRANCE SYSTEMS
DOOR AND SIDELITES

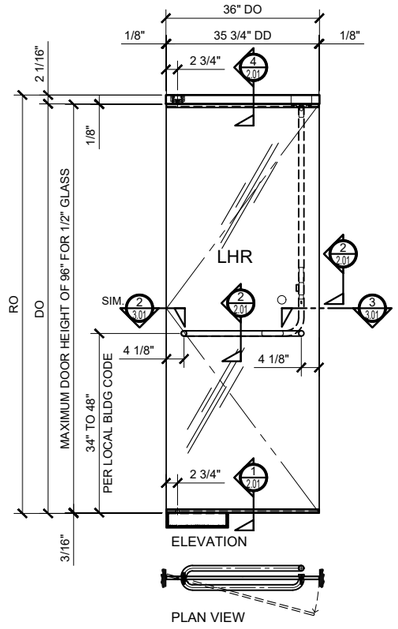

SINGLE DOOR
PA100A PANIC HANDLE
ADJUSTABLE PIVOT & BTS80 FLOOR CLOSER

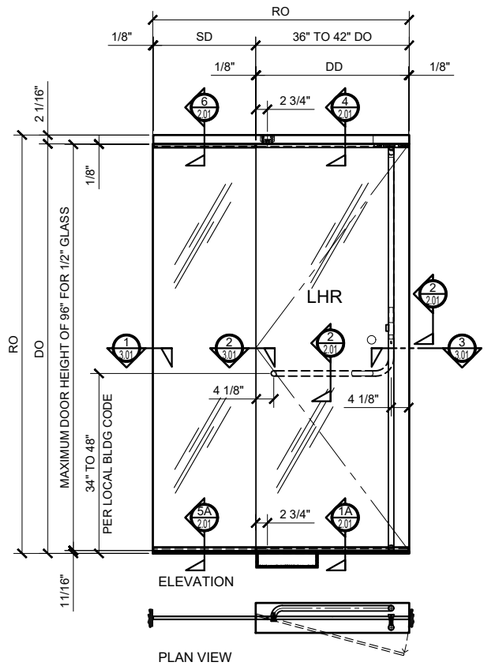

SINGLE DOOR WITH SIDELITE
PA100F PANIC HANDLES
ADJUSTABLE PIVOT & BTS80 FLOOR CLOSER

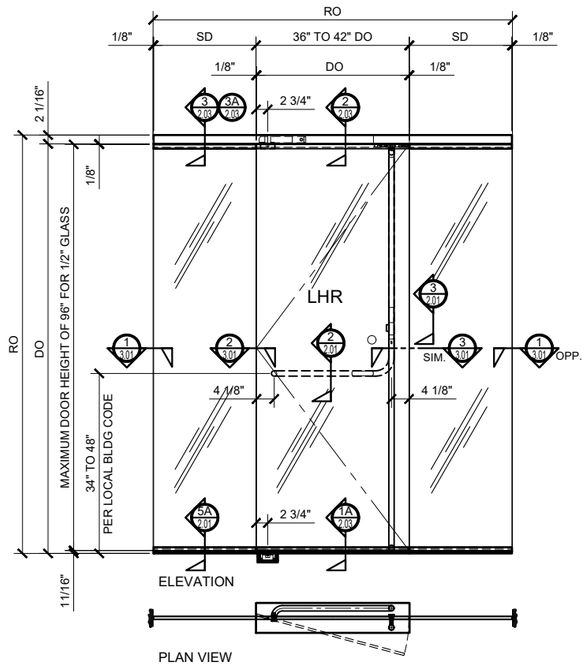

SINGLE DOOR WITH SIDELITE
PA100F PANIC HANDLES
OVERHEAD CONCEALED CLOSER & BOTTOM PIVOT

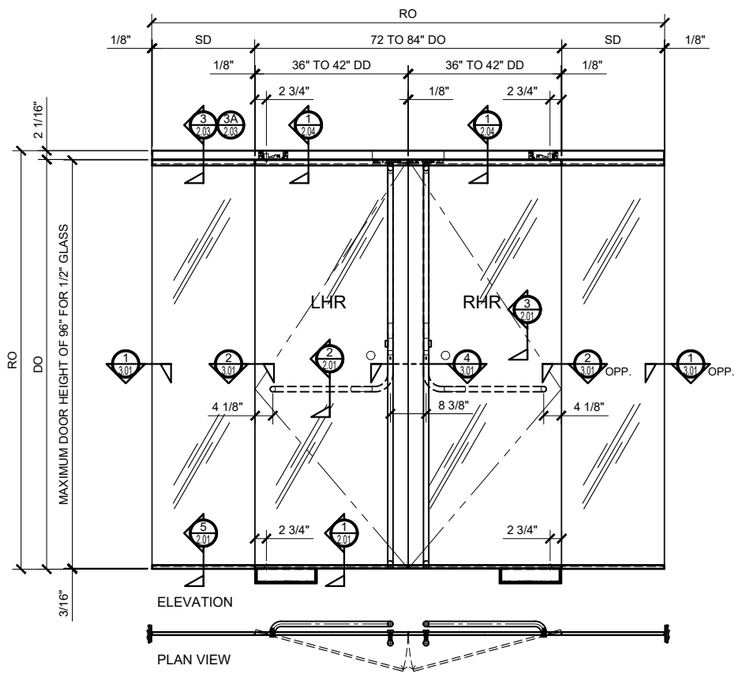

DOUBLE DOORS WITH SIDELITE
PA100F PANIC HANDLES
WALKING BEAM PIVOT & BTS80 FLOOR CLOSER

DOOR SWING CHART

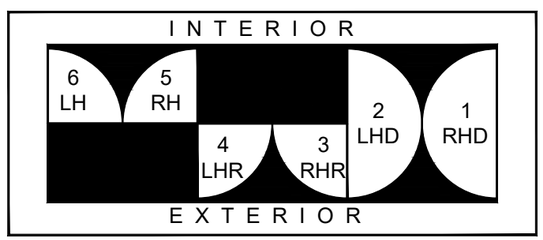

STRUCTURAL DISCLAIMER:
ALL CUSTOMERS WHO IN ANY WAY UTILIZE THIS PRODUCT ARE SOLELY RESPONSIBLE TO CONSULT A STRUCTURAL ENGINEER TO DETERMINE THE SUITABILITY OF THE PRODUCT FOR THE INTENDED USE AND SITE CONDITIONS. ALL INSTALLERS MUST BE QUALIFIED AND HAVE PROFESSIONAL KNOWLEDGE ABOUT COMPLIANCE WITH LOCAL, STATE AND FEDERAL REGULATIONS, SAFETY FACTORS, AND THE APPROPRIATE CHOICE OF FIXING MATERIAL AND PROCEDURES.

"INDUSTRY STANDARD" DOOR STYLES AND SWINGING DOOR PATTERNS

THERE ARE THREE BASIC 'ALL-GLASS' DOOR STYLES TYPICALLY REFERRED TO THROUGHOUT THE INDUSTRY APPLICABLE TO THE CRL SLENDER PROFILE DOOR RAIL SYSTEMS. BY IDENTIFYING YOUR BASIC DOOR STYLE AND SWING, IT WILL HELP MAKE CLEAR WHAT YOUR INTENTIONS ARE FOR THE PARTICULAR PROJECT. FOR MORE INFORMATION, PLEASE CONTACT OUR TECHNICAL SALES DEPARTMENT AT (800) 421-6144 IN THE U.S., (877) 421-6144 IN CANADA, OR (323) 588-1281 INTERNATIONAL. ASK FOR EXT. 7700. YOU CAN SEND E-MAIL THROUGH THE crlaurence.com HOME PAGE. CLICK ON CONTACT US, AND THEN CLICK ON TECHNICAL SALES FOR COMMERCIAL PRODUCTS.

STANDARD ABBREVIATIONS	
RO	ROUGH OPENING
FD	FRAME DIMENSION
DLO	DAYLIGHT OPENING
DO	DOOR OPENING
DD	DOOR DIMENSION
TD	TRANSOM DIMENSION
SD	SIDELITE DIMENSION
SMC	SURFACE MOUNTED CLOSER
OHCC	OVERHEAD CONCEALED CLOSER

Revisions By:

C.R. LAURENCE CO. ARCHITECTURAL PRODUCTS
2381 E. Vernon Ave., Los Angeles, CA 90058-1697
PH (800) 421-6144 FX: 800-587-7501 www.crlaurence.com

Description:
CRL / BLUMCRAFT
SERIES 1301 W/1/2",5/8",3/4"
GLASS ENTRANCE SYSTEMS
W/ PANIC HANDLES

Drawn By: TGM
Date: 11/09/18
Scale: AS NOTED
File Name: 1301_Series_BC_Ent_Sys.dwg

Sheet
1.01

CRL BLUMCRAFT SERIES 1301 ENTRANCE SYSTEMS
DOOR AND SIDELITES

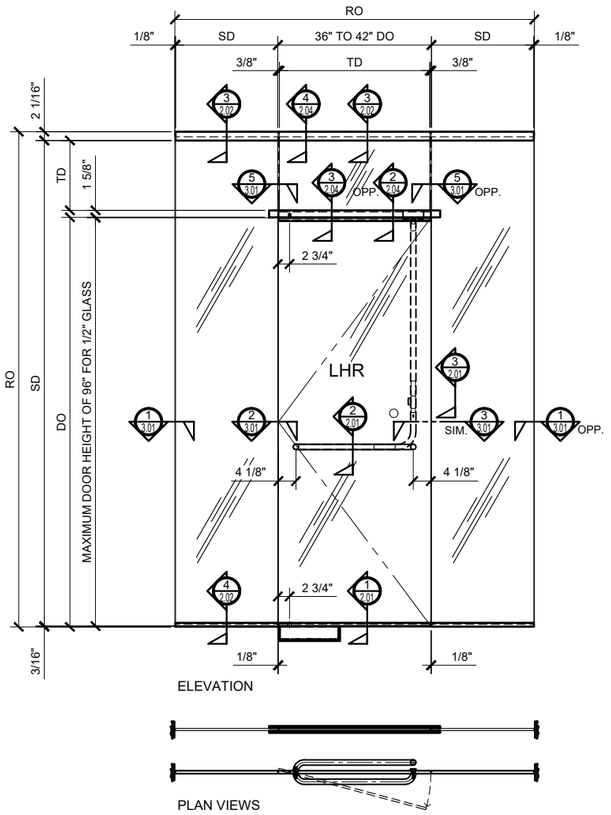

SINGLE DOOR WITH SIDELITE
PA100A PANIC HANDLE
ADJUSTABLE PIVOT & BTS80 FLOOR CLOSER

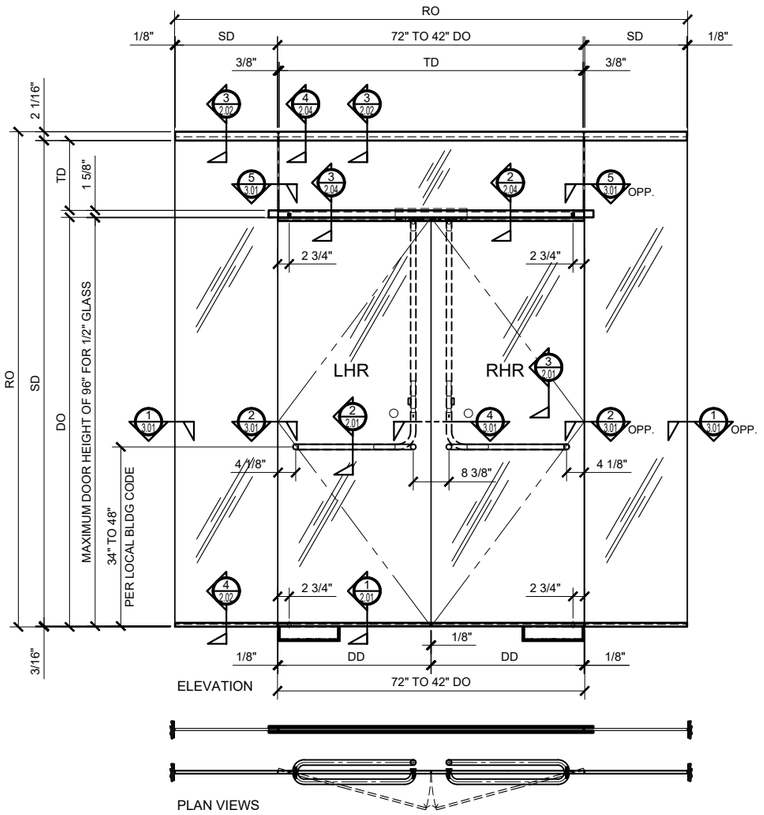

SINGLE DOOR WITH SIDELITES
PA100A PANIC HANDLES
ADJUSTABLE PIVOT & BTS80 FLOOR CLOSER

STANDARD DOOR WIDTH & HEIGHT GUIDELINES

1/2" (12mm) TEMPERED GLASS = 42" x 96" RECOMEDED MAX HEIGHT
42" x108" WITH EXTERIOR "F" STYLE HANDLE

3/4" (19mm) TEMPERED GLASS = 42" x 102" RECOMEDED MAX HEIGHT
42" x108" WITH EXTERIOR "F" STYLE HANDLE

* FULLY GLAZED WITH 1/2", 5/8" OR 3/4" (12,16 OR 19MM) TEMPERED GLASS

* SOLID STAINLESS STEEL OR BRONZE RAIL CONSTRUCTION

* RAILS AS SLIM AS 3/4" x 3/4" (19 x 19MM), TOP RAIL SIZES VARY BASED ON DOOR HARDWARE

* COMPLETE WITH EGRESS HANDLE IF REQUIRED

* BRUSHED, POLISHED AND OIL RUBBED (BRONZE) FINISHES AVAILABLE

* STD 1301 SERIES SYSTEM INCLUDES C7500 HEAD W/ ADJUSTABLE TOP PIVOT & CUSTOM FLORR CLOSER

* HEADERS COMPATIBLE WITH OVERHEAD CONCEALED CLOSER AND CUSTOM BOTTOM PIVOT

* 1 3/4", 2", 4", 4 1/2" & 6" HEADER ARE AVAILABLE TO MEET DESIGN REQUIREMENTS

* FULLY GLAZED SIDELITES TO MATCH RAILS ARE AVAILABLE

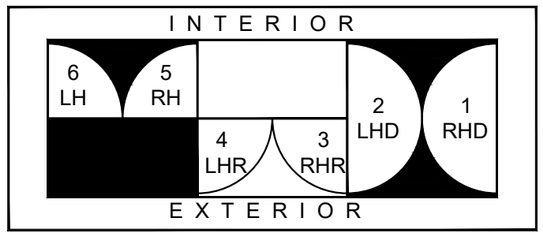

"INDUSTRY STANDARD" DOOR STYLES AND SWINGING DOOR PATTERNS

THERE ARE THREE BASIC 'ALL-GLASS' DOOR STYLES TYPICALLY REFERRED TO THROUGHOUT THE INDUSTRY APPLICABLE TO THE CRL SLENDER PROFILE DOOR RAIL SYSTEMS. BY IDENTIFYING YOUR BASIC DOOR STYLE AND SWING, IT WILL HELP MAKE CLEAR WHAT YOUR INTENTIONS ARE FOR THE PARTICULAR PROJECT. FOR MORE INFORMATION, PLEASE CONTACT OUR TECHNICAL SALES DEPARTMENT AT (800) 421-6144 IN THE U.S., (877) 421-6144 IN CANADA, OR (323) 588-1281 INTERNATIONAL. ASK FOR EXT. 7700. YOU CAN SEND E-MAIL THROUGH THE crlaurence.com HOME PAGE. CLICK ON CONTACT US, AND THEN CLICK ON TECHNICAL SALES FOR COMMERCIAL PRODUCTS.

STANDARD ABBREVIATIONS

RO	ROUGH OPENING
FD	FRAME DIMENSION
DLO	DAYLIGHT OPENING
DO	DOOR OPENING
DD	DOOR DIMENSION
TD	TRANSOM DIMENSION
SD	SIDELITE DIMENSION
SMC	SURFACE MOUNTED CLOSER
OHCC	OVERHEAD CONCEALED CLOSER

Revisions By:

C.R.LAURENCE CO. ARCHITECTURAL PRODUCTS
2381 E. Vernon Ave., Los Angeles, CA 90058-1697
PH (800) 421-6144 FX: 800-587-7501 www.crlaurence.com

Description:
CRL / BLUMCRAFT
SERIES 1301 W/1/2",5/8",3/4"
GLASS ENTRANCE SYSTEMS
W/ PANIC HANDLES

Drawn By:	TGM
Date:	11/09/18
Scale:	AS NOTED
File Name:	1301_Series_BC_Ent_Sys.dwg

Sheet
1.02

CRL BLUMCRAFT SERIES 1301 ENTRANCE SYSTEMS
DOOR AND PANIC HANDLES

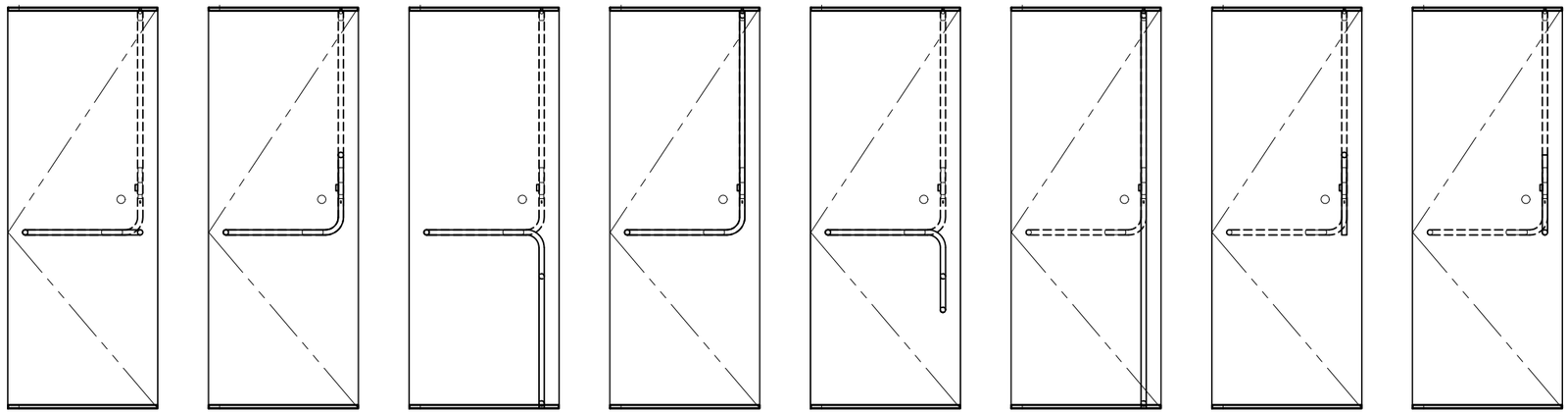

PA100A STYLE | PA100B STYLE | PA100C STYLE | PA100D STYLE | PA100E STYLE | PA100F STYLE | PA100G STYLE | PA100H STYLE

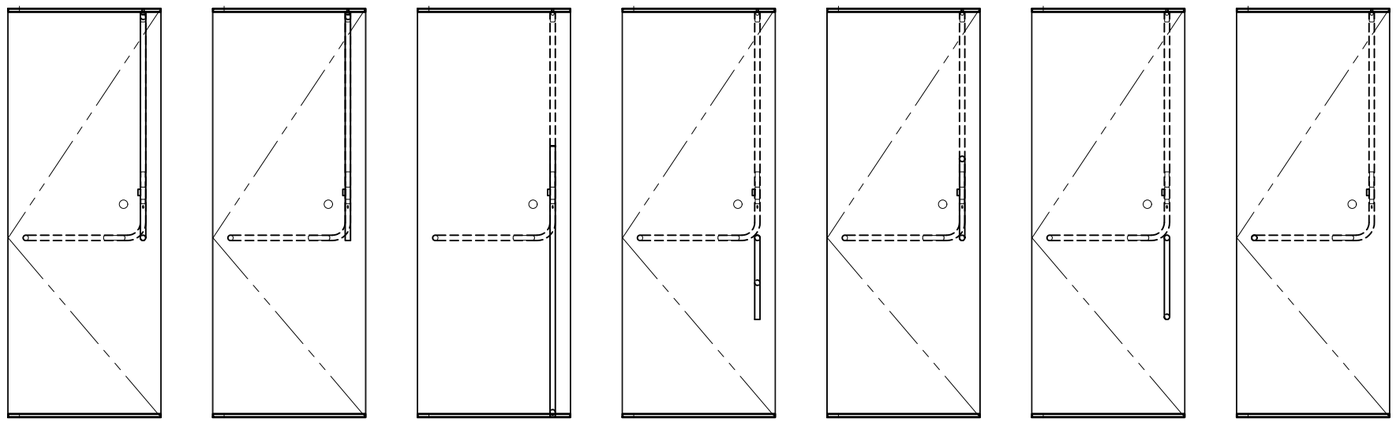

PA100J STYLE | PA100JS STYLE | PA100MS STYLE | PA100P STYLE | PA100X STYLE | PA100Y STYLE | PA100Z STYLE

EXTERIOR ELEVATIONS - TYPICAL PA100 PANIC HANDLE STYLES

Revisions By:

C.R. LAURENCE CO. ARCHITECTURAL PRODUCTS
2503 E. Vernon Avenue, Los Angeles, CA 90058-1897
PH (800)-421-6144 FX: 800-587-7501 www.crlaurence.com

Description:
CRL / BLUMCRAFT
SERIES 1301 W/1/2",5/8",3/4"
GLASS ENTRANCE SYSTEMS
W/ PANIC HANDLES

Drawn By:	TGM
Date:	11/09/18
Scale:	AS NOTED
File Name:	1301_Series_BC_Ent_Sys.dwg

Sheet
1.03

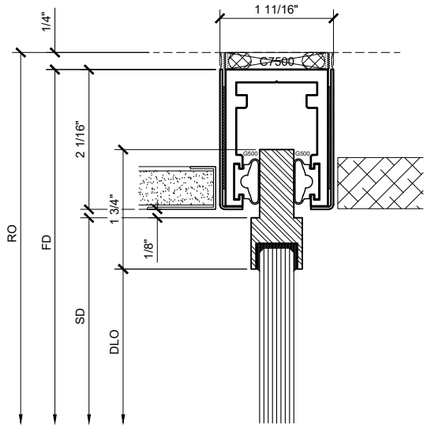

6 SIDELITE HEAD DETAIL (3/4" TOPHAT)
ARCH REF: NONE 1'-0"=1'-0"

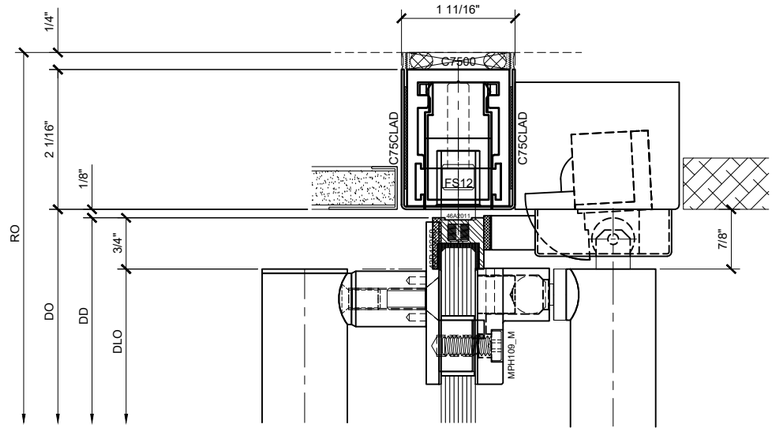

4 DOOR HEAD DETAIL
ARCH REF: NONE 1'-0"=1'-0"

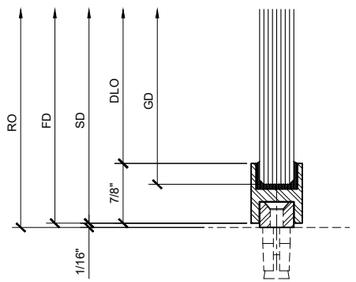

5 SIDELITE SILL DETAIL
ARCH REF: NONE 1'-0"=1'-0"

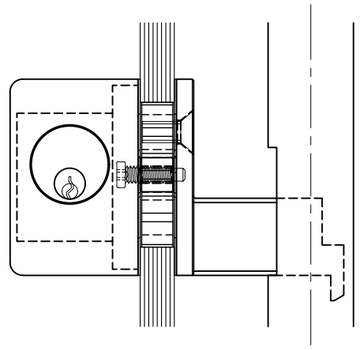

3 KEYED PANIC ACTUATOR DETAIL
ARCH REF: NONE 1'-0"=1'-0"

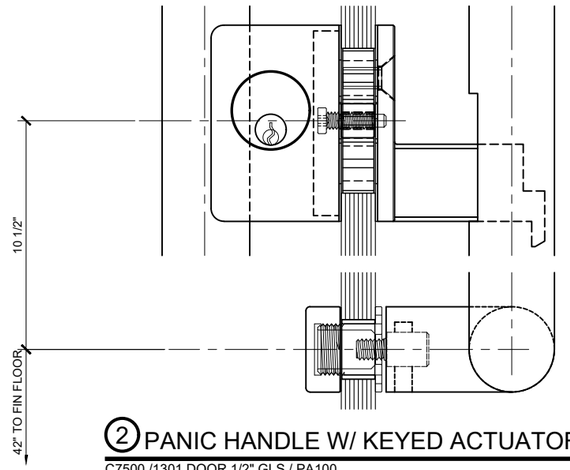

2 PANIC HANDLE W/ KEYED ACTUATOR DETAIL
C7500 /1301 DOOR 1/2" GLS / PA100 1'-0"=1'-0"

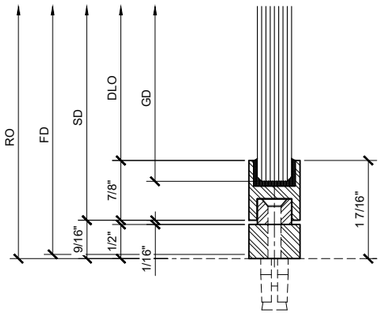

5A SIDELITE SILL DETAIL
ARCH REF: NONE 1'-0"=1'-0"

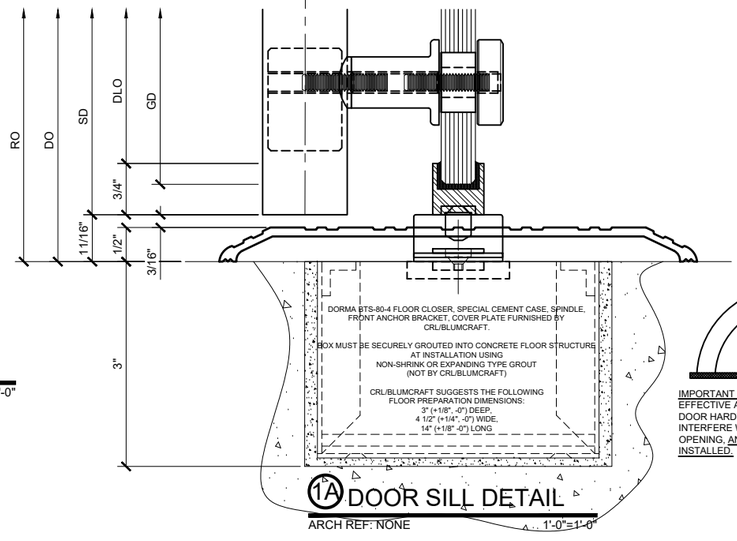

1A DOOR SILL DETAIL
ARCH REF: NONE 1'-0"=1'-0"

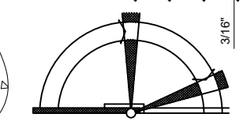

IMPORTANT NOTE: MECHANICAL BACK CHECK IS EFFECTIVE AT APPROXIMATELY 85° OR 165°. IF DOOR HARDWARE OR ADJACENT STRUCTURES INTERFERE WITH MAXIMUM DEGREE OF DOOR OPENING, AN AUXILIARY DOOR STOP SHOULD BE INSTALLED. PLEASE ADVISE BLUMCRAFT.

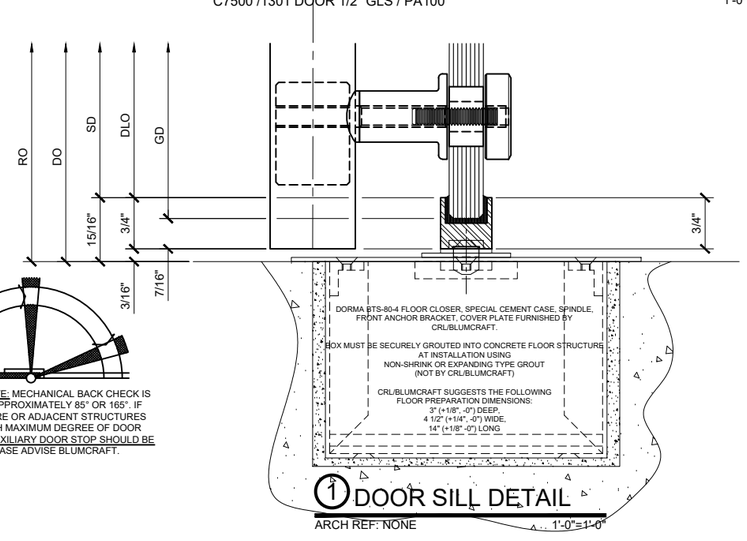

1 DOOR SILL DETAIL
ARCH REF: NONE 1'-0"=1'-0"

Revisions By:

C.R. LAURENCE CO. ARCHITECTURAL PRODUCTS
2503 E. Vernon Avenue, Los Angeles, CA 90058-1897
PH (800)-421-6144 FX: 800-587-7501 www.crlaurence.com

Description:
CRL / BLUMCRAFT
SERIES 1301 W/1/2",5/8",3/4"
GLASS ENTRANCE SYSTEMS
W/ PANIC HANDLES

Drawn By:	TGM
Date:	11/09/18
Scale:	AS NOTED
File Name:	1301_Series_BC_Ent_Sys.dwg

Sheet
2.01

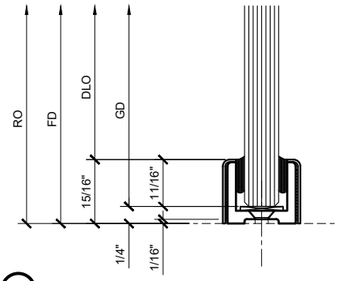

4 WET GLAZE SIDELITE SILL DETAIL

ARCH REF: NONE 1'-0"=1'-0"

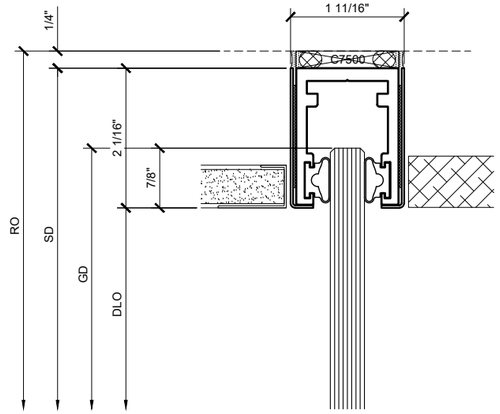

3 SIDELITE HEAD DETAIL

ARCH REF: NONE 1'-0"=1'-0"

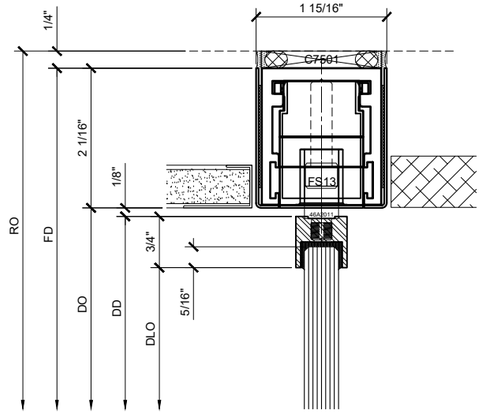

2 OPTIONAL HEAD DETAIL

ARCH REF: NONE 1'-0"=1'-0"

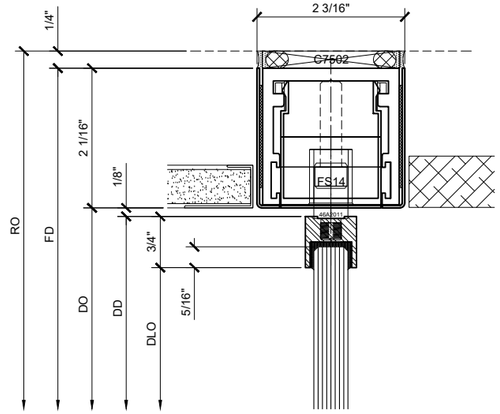

1 OPTIONAL HEAD DETAIL

ARCH REF: NONE 1'-0"=1'-0"

OPTIONAL BLUMCRAFT 1301 SERIES HEAD DETAILS FOR AJUSTABLE TOP PIVOTS

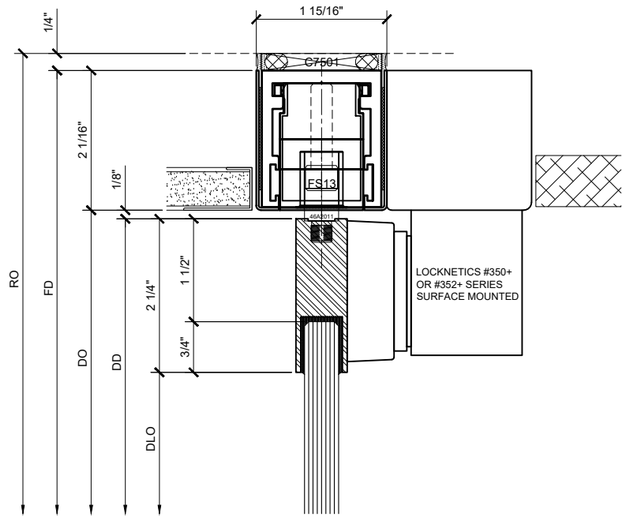

5 OPTIONAL MAG - LOCK HEAD DETAIL

ARCH REF: NONE 1'-0"=1'-0"

OPTIONAL BLUMCRAFT 1301 SERIES 2 1/4" TOP RAIL FOR MAG - LOCK DETAILS

Revisions By:

C.R.LAURENCE CO. ARCHITECTURAL PRODUCTS
2381 E. Vernon Ave., Los Angeles, CA 90058-1697
PH (800)-421-6144 FX: 800-587-7501 www.crlaurence.com

Description:
CRL / BLUMCRAFT
SERIES 1301 W/1/2",5/8",3/4"
GLASS ENTRANCE SYSTEMS
W/ PANIC HANDLES

Drawn By:	TGM
Date:	11/09/18
Scale:	AS NOTED
File Name:	1301_Series_BC_Ent_Sys.dwg

Sheet
2.02

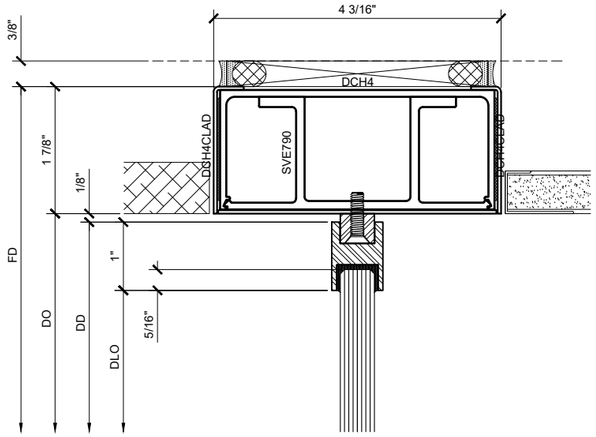

3 SIDELITE HEAD DETAIL

ARCH REF: NONE 1'-0"=1'-0"

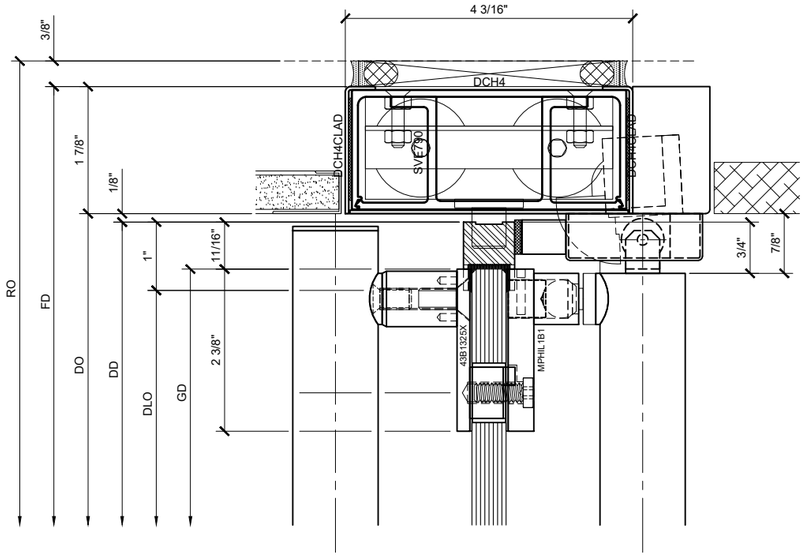

2 OHCC / PANIC HANDLE HEAD DETAIL

ARCH REF: NONE 1'-0"=1'-0"

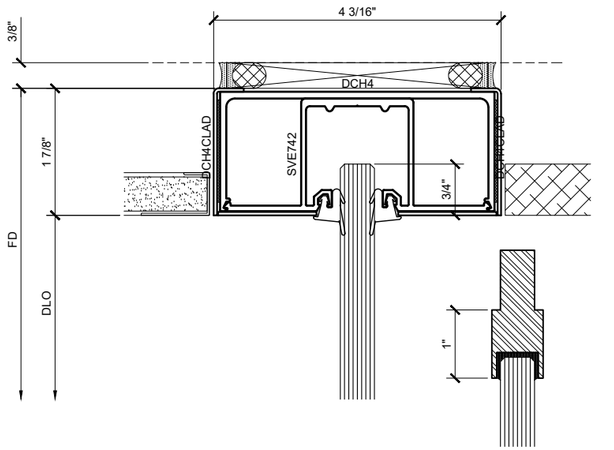

OPTIONAL 1" TOPHAT

3A OPTIONAL SIDELITE HEAD DETAIL

ARCH REF: NONE 1'-0"=1'-0"

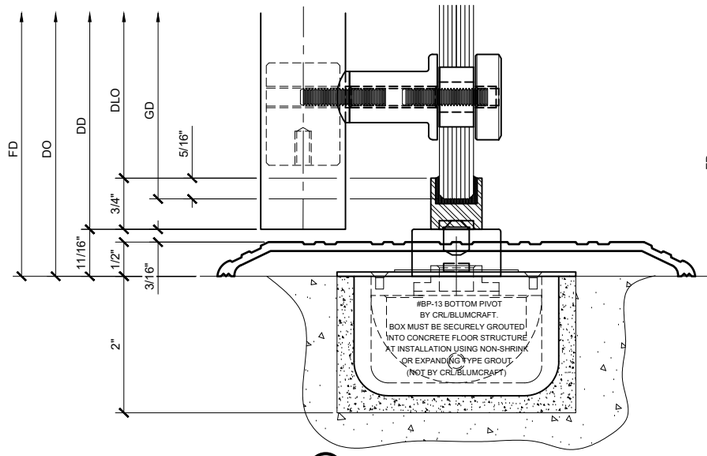

1A DOOR SILL DETAIL

ARCH REF: NONE 1'-0"=1'-0"

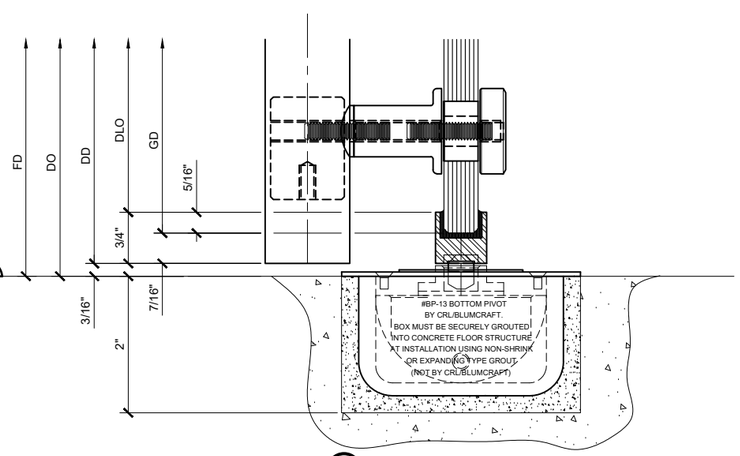

1 DOOR SILL DETAIL

ARCH REF: NONE 1'-0"=1'-0"

BLUMCRAFT 1301 SERIES OVERHEAD CONCEALED CLOSER DETAILS

Revisions By:

C.R. LAURENCE CO. ARCHITECTURAL PRODUCTS
2381 E. Vernon Ave., Los Angeles, CA 90058-1697
PH (800)-421-6144 FX: 800-587-7501 www.crlaurence.com

Description:
CRL / BLUMCRAFT
SERIES 1301 W/1/2",5/8",3/4"
GLASS ENTRANCE SYSTEMS
W/ PANIC HANDLES

Drawn By:	TGM
Date:	11/09/18
Scale:	AS NOTED
File Name:	1301_Series_BC_Ent_Sys.dwg

Sheet
2.03

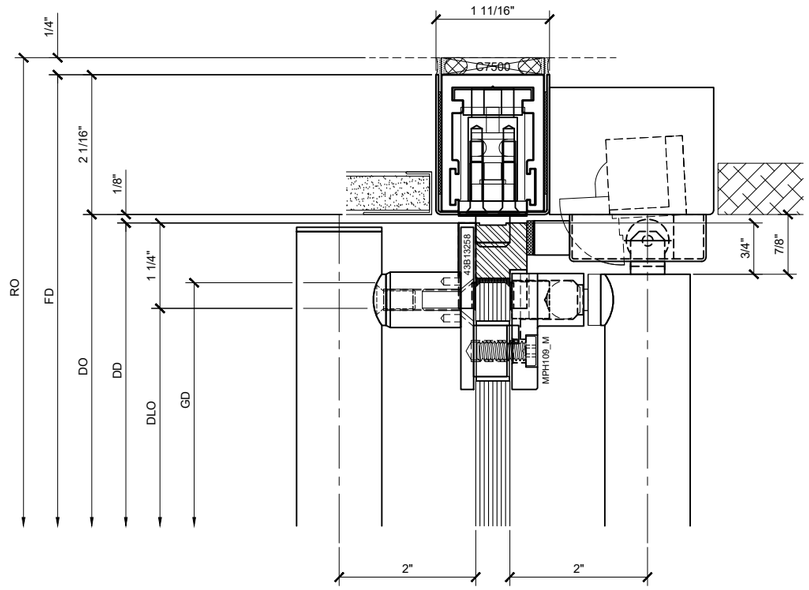

1 WBP 8062.5 / PANIC HANDLE HEAD DETAIL

ARCH REF: NONE 1'-0"=1'-0"

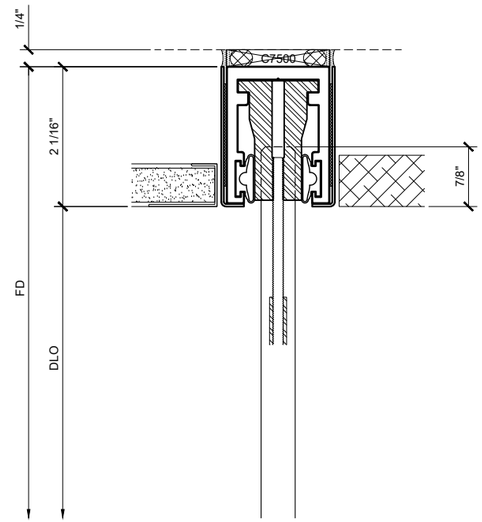

4 TEE - NUT SUPPORT HEAD DETAIL

ARCH REF: NONE 1'-0"=1'-0"

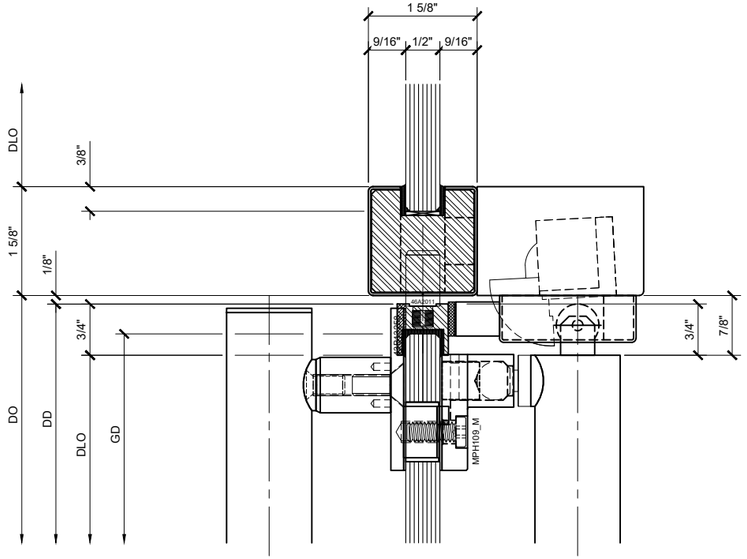

2 FLOATING TRANSOM HEAD DETAIL

ARCH REF: NONE 1'-0"=1'-0"

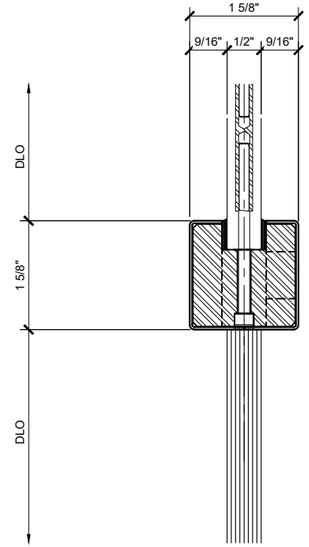

3 FLOATING TRANSOM SUPPORT DETAIL

ARCH REF: NONE 1'-0"=1'-0"

Revisions By:

C.R.LAURENCE CO. ARCHITECTURAL PRODUCTS
2381 E. Vernon Ave., Los Angeles, CA 90058-1697
PH (800)-421-6144 FX: 800-587-7501 www.crlaurence.com

Description:
CRL / BLUMCRAFT
SERIES 1301 W/1/2",5/8",3/4"
GLASS ENTRANCE SYSTEMS
W/ PANIC HANDLES

Drawn By:	TGM
Date:	11/09/18
Scale:	AS NOTED
File Name:	1301_Series_BC_Ent_Sys.dwg

Sheet
2.04

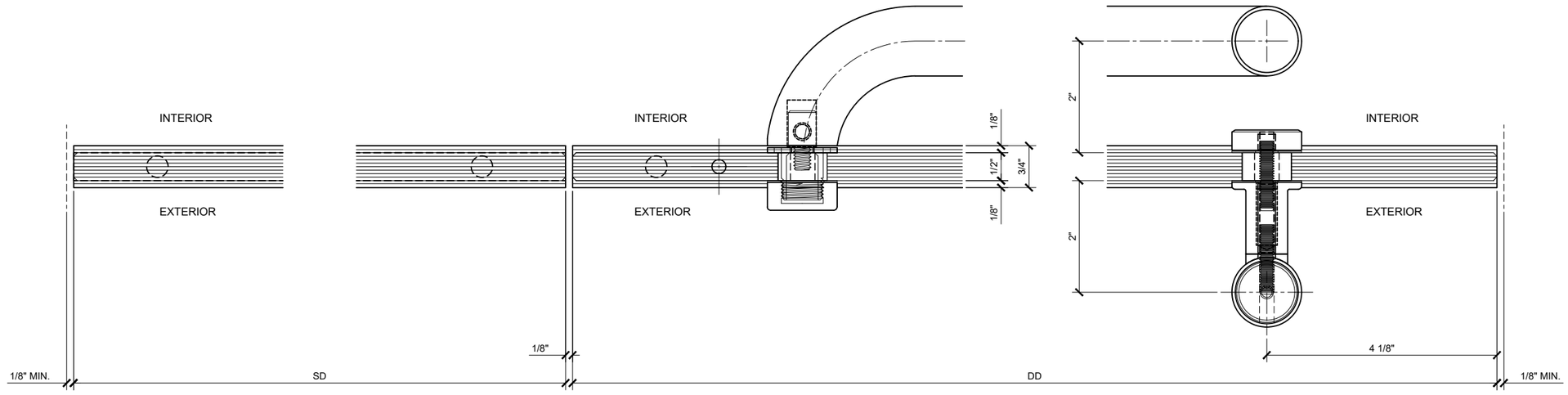

1 SIDELITE AT JAMB DETAIL

ARCH REF: NONE 1'-0"=1'-0"

2 DETAIL AT PANIC HANDLE

ARCH REF: NONE 1'-0"=1'-0"

3 DETAIL AT PANIC HANDLE

ARCH REF: NONE 1'-0"=1'-0"

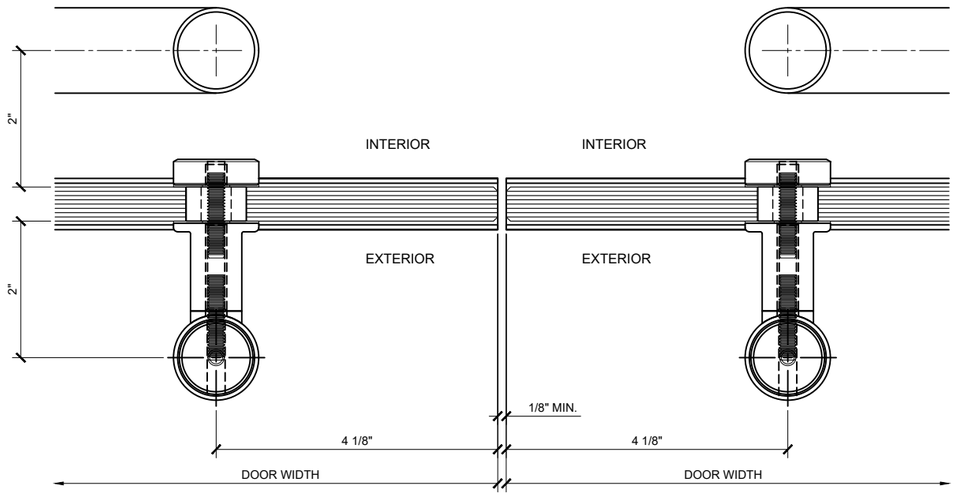

4 MEETING STILES AT PANIC HANDLE

ARCH REF: NONE 1'-0"=1'-0"

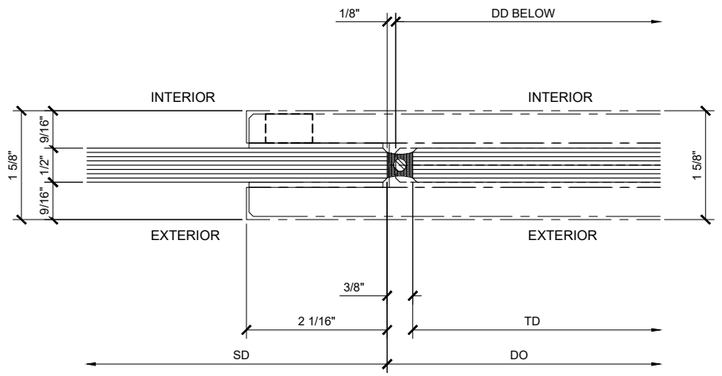

5 SOLID FLOATING TRANSOM AT SUPPORT DETAIL

ARCH REF: NONE 1'-0"=1'-0"

Revisions By:

C.R.LAURENCE CO. ARCHITECTURAL PRODUCTS
2381 E. Vernon Ave., Los Angeles, CA 90058-1697
PH (800)-421-6144 FX: 800-587-7501 www.crlaurence.com

Description:
CRL / BLUMCRAFT
SERIES 1301 W/1/2",5/8",3/4"
GLASS ENTRANCE SYSTEMS
W/ PANIC HANDLES

Drawn By:	TGM
Date:	11/09/18
Scale:	AS NOTED
File Name:	1301_Series_BC_Ent_Sys.dwg

Sheet
3.01

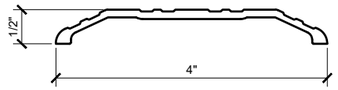

CRL TH014A ALUMINUM THRESHOLD

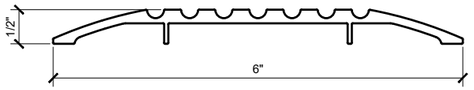

CRL 42A ALUMINUM THRESHOLD

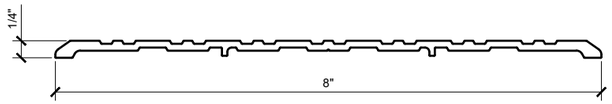

CRL 492A ALUMINUM THRESHOLD

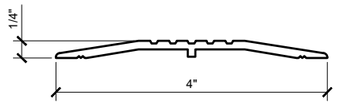

CRL 38A ALUMINUM THRESHOLD

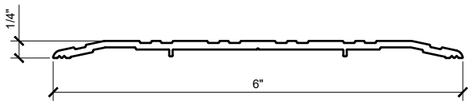

CRL 49A ALUMINUM THRESHOLD

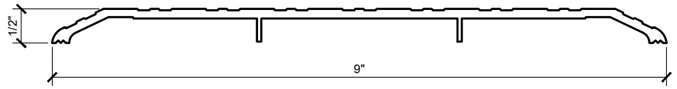

CRL TH019A ALUMINUM THRESHOLD

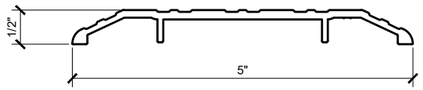

CRL TH015 ALUMINUM THRESHOLD

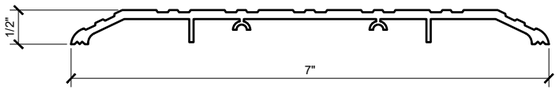

CRL TH017A ALUMINUM THRESHOLD

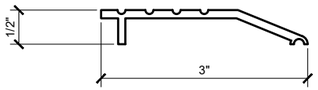

CRL 39A ALUMINUM THRESHOLD

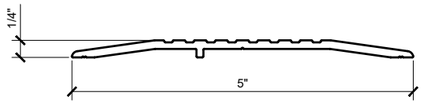

CRL 48A ALUMINUM THRESHOLD

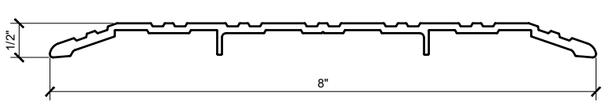

CRL 491A ALUMINUM THRESHOLD

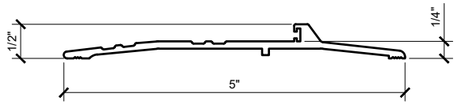

CRL 46VA ALUMINUM THRESHOLD

STANDARD ALUMINUM THRESHOLDS

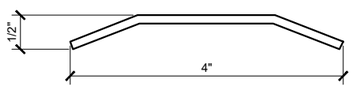

CRL TH074SS ST. STEEL THRESHOLD

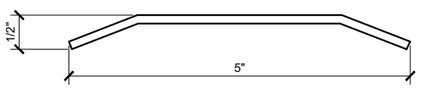

CRL TH075SS ST. STEEL THRESHOLD

STANDARD FORMED STAINLESS STEEL THRESHOLDS

Revisions By:

C.R.LAURENCE CO. ARCHITECTURAL PRODUCTS
2381 E. Vernon Ave., Los Angeles, CA 90058-1697
PH (800)-421-6144 FX: 800-587-7501 www.crlaurence.com

Description:
CRL / BLUMCRAFT
SERIES 1301 W/1/2",5/8",3/4"
GLASS ENTRANCE SYSTEMS
W/ PANIC HANDLES

Drawn By:	TGM
Date:	11/09/18
Scale:	AS NOTED
File Name:	1301_Series_BC_Ent_Sys.dwg

Sheet
4.01

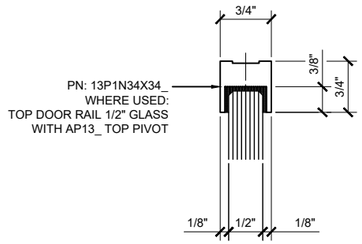

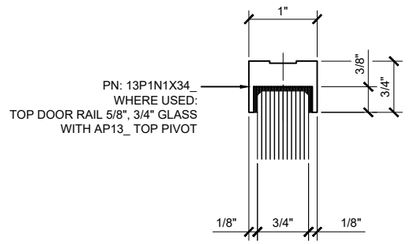

13F_ TOP DOOR RAIL BASIC SHAPES

1/2", 5/8", 3/4" GLASS

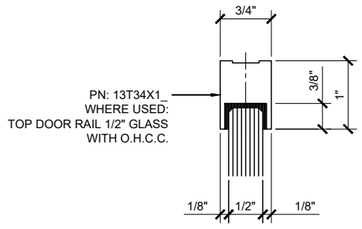

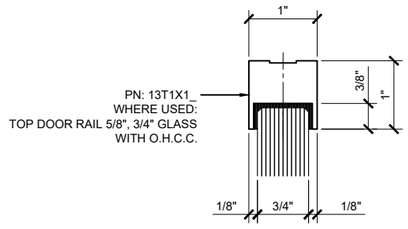

13H_ TOP DOOR RAIL BASIC SHAPES

1/2", 5/8", 3/4" GLASS

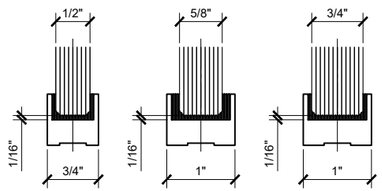

TYPICAL GLASS ENGAGEMENT IN ANY RAIL

1/2", 5/8", 3/4" GLASS

GLASS TYPES USED:

1/2" MONOLITHIC TEMPERED GLASS CLEAR
1/2" MONOLITHIC TEMPERED GLASS STARPHIRE
5/8" MONOLITHIC TEMPERED GLASS CLEAR
5/8" MONOLITHIC TEMPERED GLASS STARPHIRE
3/4" MONOLITHIC TEMPERED GLASS CLEAR
3/4" MONOLITHIC TEMPERED GLASS STARPHIRE

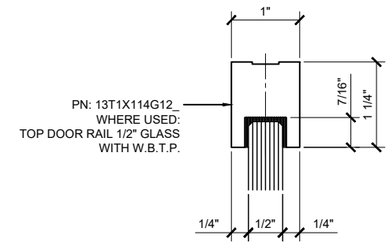

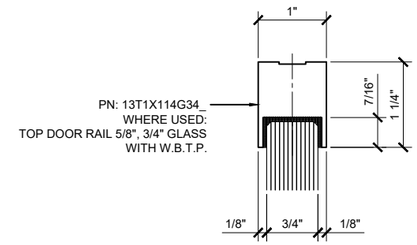

13W_ TOP DOOR RAIL BASIC SHAPES

1/2", 5/8", 3/4" GLASS

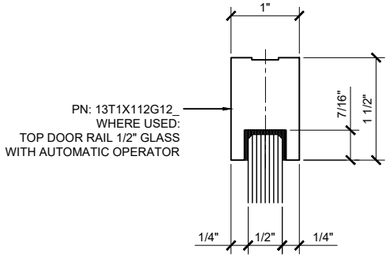

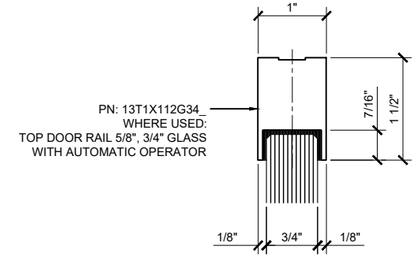

13P_ TOP DOOR RAIL BASIC SHAPES

1/2", 5/8", 3/4" GLASS

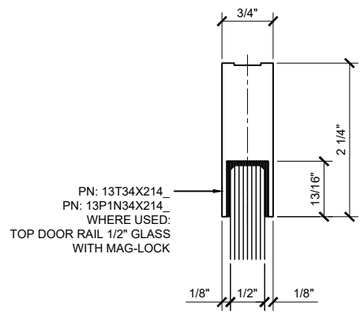

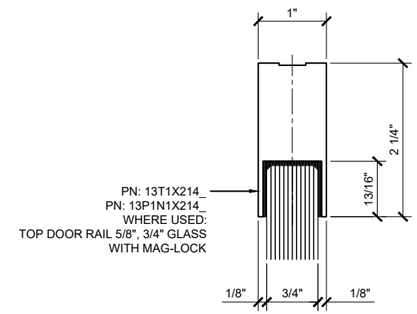

13FM_ TOP DOOR RAIL BASIC SHAPES

1/2", 5/8", 3/4" GLASS

13HM_ TOP DOOR RAIL BASIC SHAPES

1/2", 5/8", 3/4" GLASS

13WM_ TOP DOOR RAIL BASIC SHAPES

1/2", 5/8", 3/4" GLASS

Revisions By:

C.R. LAURENCE CO. ARCHITECTURAL PRODUCTS
2381 E. Vernon Ave., Los Angeles, CA 90058-1837
PH (800)-421-6144 FX: 800-587-7501 www.crlaurence.com

Description:
CRL / BLUMCRAFT
SERIES 1301 W/1/2",5/8",3/4" GLASS ENTRANCE SYSTEMS W/ PANIC HANDLES

Drawn By:	TGM
Date:	11/09/18
Scale:	AS NOTED
File Name:	1301_Series_BC_Ent_Sys.dwg

Sheet
4.02

STYLE

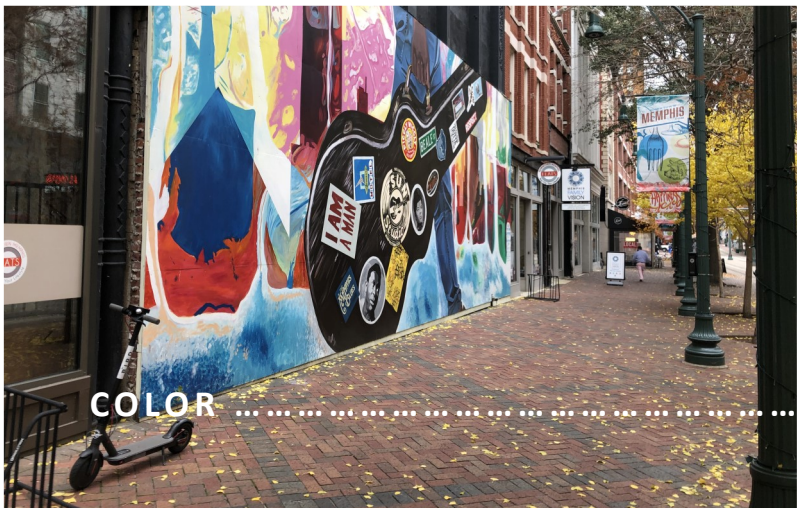

COLOR

ENTRANCE

STYLE

STYLE

COLOR

GLAZING

EXAMPLE IMAGE FOR CURTAINWALL COMPONENTS ...

YCW 750 SSG

Two and Four-sided Structural Silicone Glazed Curtain Wall System

CURTAIN WALL SYSTEM

Product Description

The popular YCW 750 family of products has been expanded to include 4-side structural silicone glazing. This stick built system is designed for glazing either in the field or in a climate controlled environment for increased quality assurance of critical seals. Shop glazed cassettes interlock with integral adapters on horizontals to create full width engagement top and bottom.

Product Options & Features

- 4-side structural silicone shop glazing
- 2-side or 4-side structural silicone glazed in the field
- 4-Side captured (YCW 750 OG & YCW 750 IG)
- 90° inside and outside corners
- Accommodates splayed wall designs
- Structural setting block chairs
- Dual Finish capability (inside / outside finish) with a variety of face covers available

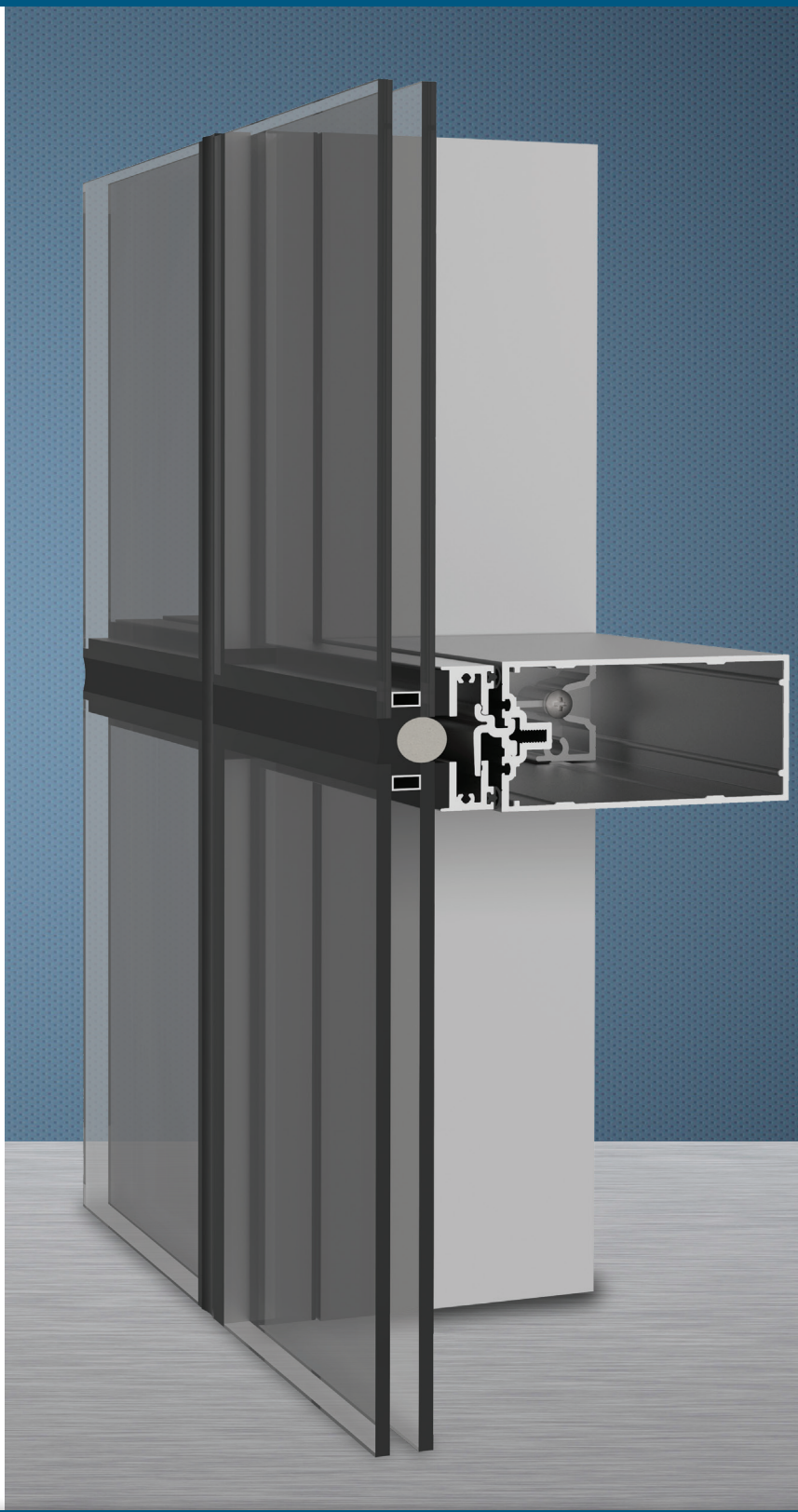

YKK ap® Quality inspires®

YCW 750 SSG

SYSTEM SPECIFICATIONS

System Sightline	Base Depth	Glazing & Config	Glass	Air Infiltration	Water Infiltration	Thermal Performance	Acoustical Performance
2-1/2"	7-1/2"	Shop or Field Glazed, Outside with Captured or SSG Front Set	1" IGU with Low-E (C.O.G. U-factor: 0.29)	0.06 CFM/FT² (1.10 m³/h·m²) @ 6.24 PSF (299 Pa)	**2-sided Static:** 20 PSF (957 Pa) **2-sided Dynamic:** 20 PSF (957 Pa)	**Shop U-factor:** 0.36 BTU/HR•FT²•ºF* **Shop CRF:** Minimum of 80 on frame**	**Shop Std STC:** 33 **Shop Std OITC:** 26 **Shop Lam STC:** 37 **Shop Lam OITC:** 31
					4-sided Static: 15 PSF (718 Pa) **4-sided Dynamic:** 15 PSF (718 Pa)	**Field U-factor:** 0.38 BTU/HR•FT²•ºF* **Field CRF:** Minimum of 76 on frame**	**Field Std STC:** 33 **Field Std OITC:** 27 **Field Lam STC:** 36 **Field Lam OITC:** 31
Testing Standards				ASTM E 283	ASTM E 331 & AAMA 501.1	* NFRC 100 & ** AAMA 1503	ASTM E 90 & 1425

Optional Depths	**2-sided:** 5-1/4" to 7-1/2" **4-sided:** 5" to 10-3/8"
Available Finishes	Factory Anodized (AAMA 612) and Organic Paints (AAMA 2604 & AAMA 2605)

A CLOSER LOOK

Shop Glazed Option Shown

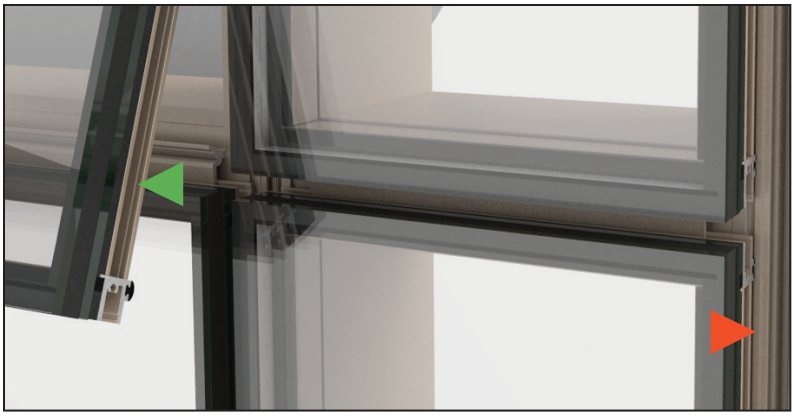

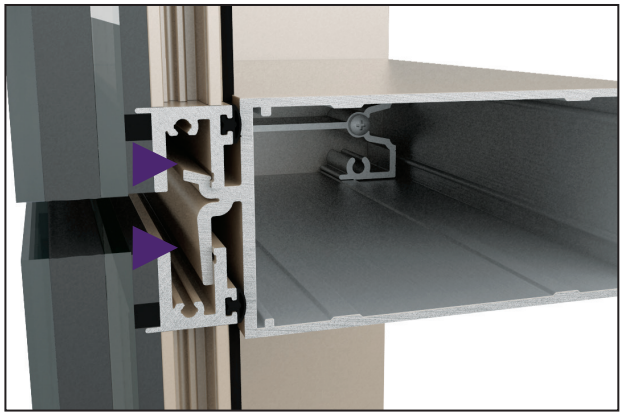

Curtain Wall framing erected on site.

Glass is structurally silicone glazed to an aluminum carrier frame or cassette, in a clean, temperature controlled shop environment.

Glazed cassette interlocks with an integral adaptor on the horizontals

Mechanical attachment is completed with installation of rotating lock bars on verticals (not shown).

Two-Side SSG Option

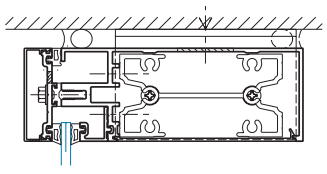

HEAD

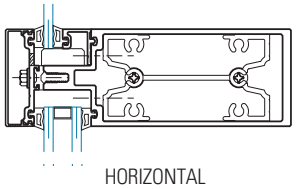

HORIZONTAL

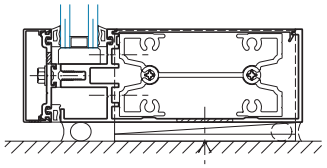

SILL

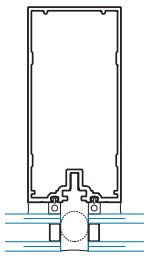

VERTICAL

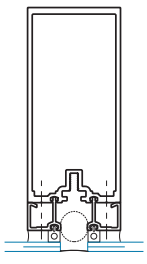

HEAVY DUTY VERTICAL

Additional information including CAD details, CSI specifications, Test Reports and Installation instructions are available online at:
www.ykkap.com/commercial/product/curtain-walls/ycw-750-ssg/

©2018 YKK AP America Inc. is a subsidiary of YKK Corporation of America.
270 Riverside Pkwy, Suite 100, Austell, GA 30168 Tel: 678-838-6000

Flush Metal Door

Flush Commercial Hollow Metal Doors

Starting at **$220**

Nationwide Delivery!

The flush hollow metal door or *steel slab door* is the most common commercial steel door and can be used for virtually any application, including industrial and commercial buildings. Flush doors have no cut-outs for anything other than locksets and hinges but can be prepped for other door hardware, glass kits and louvers.

- Heavy Duty 18 Gauge Steel

- Rigid Honeycomb Core or Polystyrene Core
- Ideal for Exterior and Interior Applications

CONFIGURE & GET PRICE (https://www.trudoor.com/quote-request)

Stock Door Specifications

- Heavy Duty, SDI Level 2 - 18 Gauge Steel Face Sheets - (16 Ga. Available)
- Rigid Honeycomb Core or Polystyrene Core
- Standard Widths up to 4'0", Height to 8'0" (Custom Sizes Available)
- 1-3/4" Thickness Standard
- Non-Handed Design; Reversible Hinge Plates
- Full Height, Epoxy Filled Mechanical Interlock Edges
- 14 Gauge Inverted Top and Bottom Channels
- Square Hinge and Lock Edges (Beveled Edges Available)
- Heavy Gauge Door Closer Reinforcement

- Factory Applied Baked-On Rust Inhibiting Primer (No Special Color Options) - Not intended to be a finish coat. It is recommended that finish paint (top coat) be applied after installation
- Standard Lock Preps Include 161 (cylindrical lock), 86 Edge (mortise lock), Deadbolt, RPD (blank edge, panic reinforced)
- Can be Prepped for Continuous Hinge Application
- Meets or Exceeds Standards for ANSI 250.4 and ANSI 250.8
- WHI / ITS up to 3 hour Fire-Rating (/commercial-hollow-metal-doors/fire-rated-metal-door), Positive Pressure and “S” Smoke included
- Florida Product Approved FL-13884 or FL-14237

Specifications may vary.

+ Typical Preps

+ Photos

Need Help? Visit Our Help Center (/he